Boston University, College of Fine Arts
School of Theatre
Design, Production & Management

A Light into the Theatrical World

An Exploration of Low-Voltage and High-Density Lighting for Entertainment

Case Studies and Research on the Integration, Fabrication, and Design of Lighting for Scenic, Prop, and Costume Elements

By Noah Wrafter

An Undergrad BFA Lighting Design Thesis
Submitted in partial fulfillment of Degree Requirements for Graduation
Spring 2025

This thesis was completed under the supervision of Mark Stanley, Head of the Lighting Design Program, as required by the curriculum of the BFA Design Program. Additional guidance was provided by Ben Sigda, Aja Jackson, Tori Sweetser, and Jorge Arroyo. The thesis project, as a component of our degree, is a fully self-motivated, led, and funded endeavor for students; as such, components of this thesis were provided to me by manufacturers. A large part of this thesis could not have happened without my classmates, who provided feedback, insight, and motivation. Thank you all from the bottom of my heart.

Special Thanks-

My Fellow Seniors-

India Silverman, Grant Powicki

Zack Connell, Val Zhao, Lena Broach

My Collaborators on *The Rink*-

Hope Debelius, Tessa Barry

Greg Wiggans, Davin Martin

Terry Ford, Val Zhao

Lizzie Anderson, Cu Ye, Levi Leca

Zoe Charbonneau, Ethan Vettese

My Collaborators on *Emilia*-

Zack Connell, Ailsa Smith

Darius Evans, Bianca Akoa

My Collaborators on The Costume Elements-

Webb Hodges, Rhea Davies, Riley Higgins

John Demous- **City Theatrical**

Matthew Pagliaro- **Rosco Inc**

As the entertainment industry evolves, designers, producers, and audiences alike want to see the world in a new light. While the entertainment industry continues to look for new ways to impress, the integration of lights into elements on the stage has become more widely spread. Whether it is a sound stage, theater, or touring stage, inbuilt effects have become an art within lighting and scenic design in recent years. The industry has developed a variety of methods to facilitate the team's artistic vision. The technology and techniques behind these built-for elements are relatively easy, a cable or battery for power on a static object, but elements like props and costumes that have to move often are more complicated. Integrating the necessary control and power systems into elements of a show has created an incredible balance of fabrication, design, and technical know-how in our industry.

Working to prepare myself to enter an ever-changing industry with a spectrum of jobs, and personnel, I aim to use this thesis project to educate myself in the technologies I'm exploring in this thesis and expand my toolkit for future positions. It is often said that there is more than one way to bake a cake, a mentality that also applies to the entertainment industry. Through this project, I will explore and test methodologies for practical effects in a variety of circumstances, use cases, light sources, and technical constraints to discover which technologies work best in each context/situation/format. This will push the limits of my skill set as a lighting technician, designer, and fabricator, and allow me to confidently formulate multiple solutions to achieve the effect or effects required by any production.

There are a variety of common effects seen on stage that are created using tools such as LED or pixel tape, tubes, pinspot LEDs, or theatrical units that are installed into scenic objects. Props may have custom-wired lights, micro-sized batteries, and controllers tucked away inside, and costumes could have fiber optic lights integrated into the fabric. Effects that bring life to a stage are created using these technologies and more, and it is the technology that entails such effects that I aim to develop a complete knowledge of. The application of these tools and the execution of the effects the tools are used to produce can make or break a production. The better an understanding I have of these tools, and the more opportunities I am given to use them, the better equipped I will be in future positions that require me to use the same or similar technology. Continuing to strengthen and widen the scope of my abilities as a technician is invaluable when entering a competitive industry that is ever-evolving with the introduction of each new member with unique skill sets, experiences, and ideas.

The Stratagem-

Three simple steps- pick topics, pick technologies, and plan some projects. Everything sounds easier when you say it like that. In retrospect, I probably should have made something more organized than a bullet point list to help others understand. As the ideas were reduced into the components I actually pursued, I cleaned it up to show my train of thought and logic in a more concise manner. These lists of ideas and proposals are early phases of my process and do not reflect the end products of this project.

Potential Research Topics/Items-

LED Tape & Controllers

- Color options– RGB vs RGBW vs RGBA
- Cell density
    - Does density or brightness matter more in smaller spaces, such as lightboxes or frosted channels?
- 12V vs 24V- compatibility and larger sustainability

Pixel Controller

- Guide
- Use/time and place
- DIY vs premade solution

Specialty Lights

- Fiber optics
- Single-source lamps

Technologies-

City Theatrical

- Qolorflex & Qolorpix controllers and LED tape for Film, TV, and Theatre

Falcon Controllers

- Pihat & F16V5 Pixel Controller for large and small pixel rigs

RC4

- Wireless Decoders & Receivers– how can we control things without a cable

Superbright LEDs

- Generic Controllers & Tape

Adafruit

- Neopixel- Individual Controllable LEDs in a variety of configurations

Amazon

- Fiber optics- are they bright and cheap enough to be used on a stage
- Individual Source LED's- individually controllable LEDs with a control chip on board

Pale Blue Earth

- Better Rechargeable Batteries

Potential Project Proposals-

Marquee Control

- 12- 24V power supply feeding dimming controller, each channel (normal RGB channels) controls lights in series, allowing denser control with fewer circuits dedicated to the control of practicals.
- Pixel-mappable sign of lightbulbs with individual control?

Internally Lit Costume/Wearable Element

- Fiber optics or small individual source LEDS within a costume/outfit
- Disguised manual or remote control options

Handheld Props

- Battery and DMX/IR control remotely for hand props
- Solid Apollo Controller
- Chalice with embedded lights and DMX control

Collaboration-

- Practical build, installation, and paperwork for a show or School of Theatre project
- Inbuilt costume w/props
    - Collaborate with costume production students and/or courses?
- Collaborate with the scenic/prop shop on the fabrication of elements necessary for projects above.

The Projects-

The initial list of projects, while interesting, entertaining, and relevant, was not feasible within the time available. As a result, I divided my thesis into three sections, approaching each as an individual study of lighting's integration into an element of a production: scenic lights, interactive lights, and costume lights. In addition to an experimentation-based exploration of technology in the furtherment of the project.

The first section focused on "scenic" lights and empowering and expanding the space in which the story is told. This was illustrated through Boston University's School of Theatre's production of *The Rink* by Terry McNalley with music by Kander and Ebb. A story set in Coney Island, Anna Antonelli's roller rink is about to be demolished, and with it the sour memories of her husband and estranged daughter Angel. Angel returns after her long absence, hoping to save the rink and rekindle the relationship with her mother as they explore their memories and the glory days of the rink. The second section examines how lights within handheld and actor-interactable units enhance and expand the work of the performer in a show's blocking. *Emilia*, written by Morgan Lloyd Malcolm, is inspired by the life of the 17th-century poet and feminist Emilia Bassano and her speculated role as William Shakespeare's "Dark Lady." This production ran in rep with another show, and as such, the lighting team chose to use handheld practicals with integrated lights to separate the two shows. The third section aims to explore lights within costume pieces and the methodologies for high levels of control within fabric-based elements on stage. I chose to focus on pixel-based lights in fabric and how lights could be integrated into textile-based elements. This led me to collaborate with the *Emilia* team again, as well as personal projects using test garments.

Case Study - *The Rink* Produced by the Boston University School of Theatre

First opening on Broadway in 1984, the musical originally used 50's accurate technology to depict the magical land of Antonelli's skating rink. Our goal as a design team was to recreate the Coney Island feel in space primarily through signage. The primary goal of my role on the production was to assess the requests of the scenic and lighting designers, prioritizing their dream final product and facilitating the project's appropriate documentation and plans. This began the trail of documentation showcasing my train of thought and research throughout this project.

After assessing the requirements of the process, the assistant lighting designer created a basic document accumulating the scenic drawings, requests, and research of the lighting team as a whole(appendix 1.1). This document was the first step towards a cost-out using the basic overview of each unit, and the initial proposal of technology and methodology for each. The compilation of information also acted as a method of communication between the designers and my role as the Practical Specialist, setting a clear language to describe each piece and the tech within it as we communicated.

After receiving the necessary information, primarily draftings and intended lighted elements, from the production team, I could begin breaking down the technology we would need to use to create each unit of the set. I created a series of PDFs and spreadsheets detailing the major components of each unit we would need to purchase and the procurement options we had when building each unit. The documentation aimed to provide the design team with all the information they needed to decide on the best methodology for each unit we intended to build. The first round of documentation created, also served as an initial cost analysis of the project for the production management team, providing an idea of the scale and limits of this project. Primarily focusing on the big picture, it looks at control methodologies, light sources, and other key information and choices I had to make in the fabrication of these units. The center truss offered a complex series of physical requirements, designer requests, and technological challenges.

8 - Center Truss

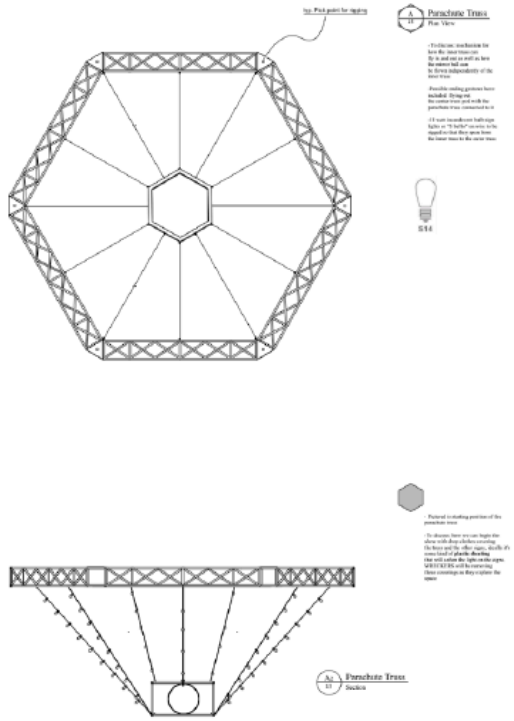

- Festoon bulbs on strings
- Individual chase
- 12x ~10ft
- Ping Pong Balls on pixels?
-

12	S14 Pixel Strands	$60
1	Pixel Decoder	Stock
1-2	12v Power Supply	Stock

36	10' Festoon Strands 2' Spacing	
	S14 Bulbs	

- https://www.alitove.net/product/led-pixels-lights/12v-led-pixels?product_id=132

Image 1.1, see Appendices for the full document. Created by Davin Martin

After the on-paper model was complete, I moved to the solutions phase. I use the center truss (see above) as the example to walk through the design process for the purpose of this thesis, but note that the same steps were taken for each unit. My first step was looking at the needs versus the wants of the design team. This meant cutting down unrealistic options, such as full pixel control everywhere, and setting achievable limits for both myself in spec'ing and in what I could provide.

The next step was finding what could be used to achieve the designers' vision. In this case, I focused on controllable string lights and conventional strings of bulbs. This quickly illuminated the options I had to achieve the desired visual appearance and what was physically and technologically possible. Once I had a few options for light sources, I then looked at control options. Factors like what power was available and data connectivity contributed to the research I pursued. In this case, I combined prior knowledge and research on pixels – WS2811 control chips specifically – and specced out three options that fit varying portions of the designer's request. Each unit had a different number of options based on what was achievable with our time, budgetary, and labor constraints. This process was repeated for each unit and was presented to the designers and production management team in the format below.

Practical 8: Central Truss

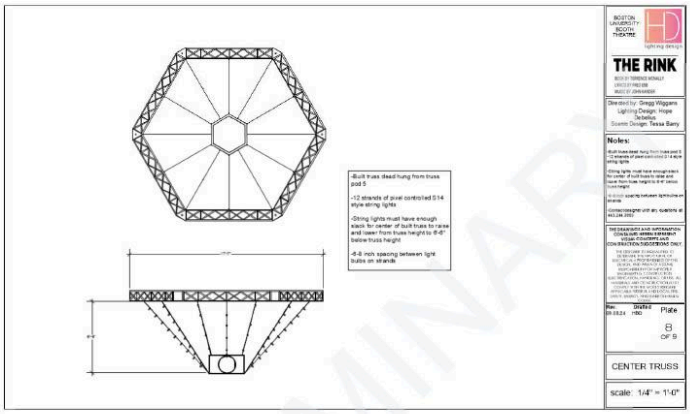

String Light Detail- 2 Channel Control Example

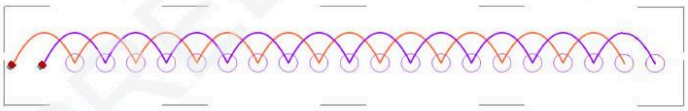

Component Costout

Option 1: Pixel Multi Control

Item	Quantity	Cost (x1)	Cost (Total)	Link
Pixel Controller--PI (STOCK)	1	$0.00	$0.00	LINK
Power Injection	1	$30.00	$30.00	LINK
12V Power Supply (30A)*	1	$39.00	$39.00	LINK
S14 Pixel Lights	12	$59.99	$719.88	LINK
	Practical Total:		$788.88	

Option 2: Single Control

Item	Quantity	Cost (x1)	Cost (Total)	Link
String lights, E26*	180	$2.09	$376.20	LINK
Light string E26 base*	12	$24.32	$291.84	LINK
Stagepin Connector (MALE) *	12	$6.80	$81.60	LINK
			$0.00	LINK
1 Channel Control per strand, 4.5A per strand	Practical Total:		$749.64	

Option 3: 2 Channel per Strand Control

Item	Quantity	Cost (x1)	Cost (Total)	Link
String lights, E26*	240	$2.09	$501.60	LINK
Light string E26 base	24	$21.99	$527.76	LINK
Stagepin Connector (MALE) *	24	$6.80	$163.20	LINK
			$0.00	LINK
2 Channel Control per strand, 3A per channel	Practical Total:		$1,192.56	

Image 1.2, see Appendices for the full document.

These evolved as I received additional information from the design team and as stricter budgetary constraints were set than we originally anticipated. This project benefited from the equipment available in the University stock, but was hurt by the limited scope of the equipment we used. This ultimately led to the final cost-out, following purchase orders and what audiences saw when they entered the world of *The Rink*.

The final cost-out doesn't reflect what we built for a variety of reasons, but it shows the evolution of the choices made in the room, effectively showing how the designers and I looked at design needs and the cost-effectiveness of our choices when making our final decision. The cost-out also used my technical drawings and included information about channeling, power draw, and the manufacturer of the gear. These documents contained further details of the needs and cost approximations for each unit and the project's prospective cost. I primarily used LED tape purchased from BTF Lighting, except for the neon look-alike tape from a mystery manufacturer, the wonders of purchasing via Amazon, or other bulk vendors. All the controllers were generic DMX decoders you can find at major online retailers, and we used Govee String Lights for the central truss with a custom controller to allow sACN (Streaming Architecture for Control Networks) control via the theatre's lighting control network. This version of the documentation also included the mirror ball that wasn't included in the original paperwork. The full package of documents was used to create the "final" plan for the project that was utilized throughout the build and installation process and led to the end-of-show documentation of what audiences saw.

MATERIALS PRICE OUT

BUDGET:	2,000.00
SPENT:	$1,892.62
OVER/UNDER:	$107.38
Percent Available:	5.37%

DESIGNER: Hope Debelius **PE:** Val Zhao
Asst: Davin Martin **Asst:** Terry Ford

PROJECT	ITEM	DESCRIPTION	QTY.	VENDOR	UNIT COST	TOTAL COST	
		Luna Sign					Note-
RNK					$0.00	$0.00	
RNK					$0.00	$0.00	
RNK					$0.00	$0.00	
RNK					$0.00	$0.00	
RNK					$0.00	$0.00	
RNK					$0.00	$0.00	
		"Red" Devil Sign					Note-
RNK	Red Neon Tape	Neon LED Tape-red	1	Amazon	$15.99	$15.99	Line 3- 5500343964
RNK	Power Switch	Rocker Switch set	1	Amazon	$6.99	$6.99	Line 3- 5500349042
RNK	Red Neon Tape	Neon LED Tape-red	1	Amazon	$13.39	$13.39	Line 10- 5500349042
RNK					$0.00	$0.00	
RNK					$0.00	$0.00	
RNK					$0.00	$0.00	
		Sun/Studio 54 Sign					Note-
RNK	Poiwer Supply (24V)	24V 15A Power Supply	1	Amazon	$28.00	$28.00	Line 12- 5500349042
RNK	RGB NEon	RGB LED tape neon	2	Amazon	$71.99	$143.98	Line 14- 5500349042
RNK	4 wire sleeved	4wire 18AWG sleeved cable(50')	1	Amazon	$24.79	$24.79	Line 15-5500349042
RNK	4 wire sleeved	4wire 18AWG sleeved cable(150')	1	Amazon	$60.78	$60.78	Line 17-5500349042
RNK					$0.00	$0.00	
RNK					$0.00	$0.00	
		"Rent-A-Skate" Sign					Note-
RNK					$0.00	$0.00	
RNK					$0.00	$0.00	
RNK					$0.00	$0.00	
RNK					$0.00	$0.00	
RNK					$0.00	$0.00	
RNK					$0.00	$0.00	
		Skater Directions Sign					Note-
RNK	WW COB Tape	COB LED Tape-WW	1	Amazon	$18.99	$18.99	Line 1- 5500343964
RNK	WW COB Tape	COB LED Tape-WW	4	Amazon	$16.10	$64.40	Line 8- 5500349042
RNK					$0.00	$0.00	
RNK					$0.00	$0.00	
RNK					$0.00	$0.00	
RNK					$0.00	$0.00	
		Arrow Sign					Note-
RNK	Red E-14 LB	Lightbulb	1	Hometown Evolution	$19.95	$19.95	Line 3- #057272
RNK	Red E-14 LB	Lightbulb	1	Hometown Evolution	$19.95	$19.95	Line 3- #057593
RNK					$0.00	$0.00	
RNK					$0.00	$0.00	
RNK					$0.00	$0.00	
RNK					$0.00	$0.00	
		Antonelli's Sign					Note-
RNK	WW E-14 LB	Lightbulb	10	Hometown Evolution	$15.95	$159.50	Line 4- #057593
RNK	white Neon Tape	Neon LED Tape-Cool white	1	Amazon	$14.99	$14.99	Line 11- 5500349042
RNK					$0.00	$0.00	
RNK					$0.00	$0.00	
RNK					$0.00	$0.00	
RNK					$0.00	$0.00	

MATERIALS PRICE OUT

BUDGET:	2,000.00
SPENT:	$1,892.62
OVER/UNDER:	$107.38
Percent Available:	5.37%

DESIGNER: Hope Debelius **PE:** Val Zhao
Asst: Davin Martin **Asst:** Terry Ford

PROJECT	ITEM	DESCRIPTION	QTY.	VENDOR	UNIT COST	TOTAL COST	
		Central Truss					Note-
RNK	String Lights	Govee Ws2811 pixel lights	1	Amazon	$79.99	$79.99	Line 1- : 5500344102
RNK	Fist Grip	HG 3/16-1/4"	12	Rigging Warehouse	$2.35	$28.20	Line 1- Inv5504087.pdf
RNK	Tie Line	COATED BK #8 1/4X100'	1	Rigging Warehouse	$16.35	$16.35	Line 2- Inv5504087.pdf
RNK	Cotton Cord	#10X100' WHITE	1	Rigging Warehouse	$19.90	$19.90	Line 3- Inv5504087.pdf
RNK	~~X-Connect Pigtails~~	~~5 Pairs, 3 pin pigtails~~	~~6~~	Amazon	~~$7.99~~	$0.00	Line 1-5500349042 **RETURNED**
RNK	String Lights	Govee Ws2811 pixel lights	5	Amazon	$99.99	$499.95	Line 9- 5500349042
RNK	Power Supply(12V)	12V 30A	2	Amazon	$28.41	$56.82	Line 6- 5500349042
RNK	X-Connect Cables	6.5' each	12	Amazon	$15.99	$191.88	Line 19- 5500349042
RNK	X-Connect Tee	Power Injection 2	3	Amazon	$15.89	$47.67	Line 20- 5500349042
RNK	X-Connect Pigtails	10 Pairs, 3 pin pigtails	2	Amazon	$23.99	$47.98	Line 1- PR412796
RNK	Power supply(12V)	12V @50A out	1	Amazon	$39.41	$39.41	Line 1- 5500357228
RNK					$0.00	$0.00	
RNK					$0.00	$0.00	
		I-Beam Inset Lights					Note-
RNK	Yellow E-14 LB	Lightbulb	1	Hometown Evolution	$19.95	$19.95	Line 2- #057272
RNK	Blue E-14 LB	Lightbulb	1	Hometown Evolution	$19.95	$19.95	Line 1- #057272
RNK	Yellow E-14 LB	Lightbulb	1	Hometown Evolution	$19.95	$19.95	Line 2- #057593
RNK	Blue E-14 LB	Lightbulb	1	Hometown Evolution	$19.95	$19.95	Line 1- #057593
RNK					$0.00	$0.00	
RNK					$0.00	$0.00	
		Rink Outline					Note-
RNK	RGB Pixel Tape	Ws2811 pixels RGB	1	Amazon	$24.99	$24.99	Line 1-5500346532
		General Supplies					Note-
RNK	Glue Sticks	4" clear	1	Amazon	$22.99	$22.99	Line 1- 5500353017
RNK	Wago 3 Slot	Wago 221-413	1	Amazon	$29.99	$29.99	Line 2- 5500349042
RNK	R&B 2 wire	22awg Hot and Neutral wire	1	Amazon	$8.46	$8.46	Line 4- 5500349042
RNK	Wago 5 Slot	Wago 221-415	2	Amazon	$16.32	$32.64	Line 5- 5500349042
RNK	Zip ties	400cnt variety	1	Amazon	$5.99	$5.99	Line 7- 5500349042
RNK	V+RGB wire	22awg 4 wire	1	Amazon	$8.46	$8.46	Line 13- 5500349042
RNK	3m Double stick	VHB	2	Amazon	$16.99	$33.98	Line 16- 5500349042
RNK	Solder seal	200pc solder seal set	3	Amazon	$8.49	$25.47	Line 18-5500349042
RNK					$0.00	$0.00	
RNK					$0.00	$0.00	
RNK					$0.00	$0.00	

Page 1 of 1
As of 12/18/2024--11:22

Noah Wrafter, Set Electrics Coordinator
(845) 554-2742 | nwrafter@bu.edu

Image 1.3, see Appendices for the full document.

A throughline of the paperwork I generated was something I call the Alien Abduction Theory. This theory was based on the idea that if I were to be abducted by aliens, all my documentation would be able to tell a crew member what they needed to do without my presence. This, in turn, allows me to pass off tasks more efficiently and increase the crew's productivity. To facilitate this goal, I focused on visuals in my drafting package with clear labels and written instructions on what steps should be taken to communicate my intentions to the crew. I used consistent labeling techniques, and took advantage of drafting standards to keep relevant information available and accessible when sorting through the paperwork. This created an exceptionally effective system that could be understood and acted upon by a variety of team members coming from different areas of specialty. Thus, the team I built and recruited from a variety of disciplines, could easily assist me in completing the work efficiently.

Each drafting included standardized drafting labels as detailed by USITT and ANSI. Visuals in a style of my own and informed by previous draftings and taught by faculty, and written instructions on the page to clarify the drawings. The team that actually built the signs was primarily me, with crew swapping in and out as they were available, and collaboration with the technical production and paint teams led to them assisting as well during crunch periods. Not all members of the crew had the same level of knowledge of the equipment as myself or each other so the techniques above, and leveraging the education we all received, greatly helped accelerate this process it also helped me reduce the number of hours I was spending on the show, and while effective I still logged approximately 480 hours over the course of 14 weeks, averaging 35 hours a week on top of my full course load of classes and the like.

	Monday	Tuesday	Wednesday	Thursday	Friday	Saturday	Sunday	
Date	9/2/2024	9/3/2024	9/4/2024	9/5/2024	9/6/2024	9/7/2024	9/8/2024	Weekly Total
Task	N/A	N/A	N/A	N/A	N/A	R&D	R&D	4
Hour Count	0	0	0	0	0	2	2	
Date	9/9/2024	9/10/2024	9/11/2024	9/12/2024	9/13/2024	9/14/2024	9/15/2024	Weekly Total
Task	R&D	R&D	R&D	R&D	R&D	R&D	R&D	43
Hour Count	4	4	6	7	4	6	12	
Date	9/16/2024	9/17/2024	9/18/2024	9/19/2024	9/20/2024	9/21/2024	9/22/2024	Weekly Total
Task	Budget&Spec	Budget&Spec	Budget&Spec	Budget&Spec	Budget&Spec	Budget&Spec	Budget&Spec	34
Hour Count	3	1	2	2	4	10	12	
Date	9/23/2024	9/24/2024	9/25/2024	9/26/2024	9/27/2024	9/28/2024	9/29/2024	Weekly Total
Task	Budget&Spec	Budget&Spec	Drafting	Drafting	Drafting	Drafting	Drafting	33
Hour Count	4	2	1	4	8	6	8	
Date	9/30/2024	10/1/2024	10/2/2024	10/3/2024	10/4/2024	10/5/2024	10/6/2024	Weekly Total
Task	Drafting	Drafting	Drafting	Drafting	Drafting	Drafting	Drafting	38
Hour Count	3	3	6	4	4	8	10	
Date	10/7/2024	10/8/2024	10/9/2024	10/10/2024	10/11/2024	10/12/2024	10/13/2024	Weekly Total
Task	Drafting	Drafting	Drafting	Drafting	Drafting	Build Prep	Build Prep	41
Hour Count	6	4	5	6	6	8	6	
Date	10/14/2024	10/15/2024	10/16/2024	10/17/2024	10/18/2024	10/19/2024	10/20/2024	Weekly Total
Task	Build Prep	Build Prep	Build Prep	Build Prep	Build	Build	Build	51
Hour Count	3	4	6	4	8	14	12	
Date	10/21/2024	10/22/2024	10/23/2024	10/24/2024	10/25/2024	10/26/2024	10/27/2024	Weekly Total
Task	Build Prep	Build Prep	Build Prep	Build Prep	Build Prep	Build Prep	Build Prep	32
Hour Count	3	4	6	4	5	4	6	
Date	10/28/2024	10/29/2024	10/30/2024	10/31/2024	11/1/2024	11/2/2024	11/3/2024	Weekly Total
Task	Build Prep	Build Prep	Build Prep	Build/Install	Build/Install	Build Prep	Build Prep	60
Hour Count	2	3	3	14	14	10	14	
Date	11/4/2024	11/5/2024	11/6/2024	11/7/2024	11/8/2024	11/9/2024	11/10/2024	Weekly Total
Task	Build/Install	Build/Install	Build/Install	Build/Install	Build/Install	Build/Install	Build/Install	64
Hour Count	8	12	14	6	4	8	12	
Date	11/11/2024	11/12/2024	11/13/2024	11/14/2024	11/15/2024	11/16/2024	11/17/2024	Weekly Total
Task	Build/Install	Build/Install	Build/Install	Build/Install	Build/Install	Build/Install	SKR/LB	57
Hour Count	8	9	7	8	11	14	0	
Date	11/18/2024	11/19/2024	11/20/2024	11/21/2024	11/22/2024	11/23/2024	11/24/2024	Weekly Total
Task	SKR/LB	SKR/LB	SKR/LB	SKR/LB	SKR/LB	SKR/LB	SKR/LB	0
Hour Count	0	0	0	0	0	0	0	
Date	11/25/2024	11/26/2024	11/27/2024	11/28/2024	11/29/2024	11/30/2024	12/1/2024	Weekly Total
Task	SKR/LB	Thanksgiving Break						0
Hour Count	0							
Date	12/2/2024	12/3/2024	12/4/2024	12/5/2024	12/6/2024	12/7/2024	12/8/2024	Weekly Total
Task	SKR/LB	SKR/LB	SKR/LB	SKR/LB	SKR/LB	SKR/LB	STRIKE	6
Hour Count	0	0	0	0	0	0	6	
Date	12/9/2024	12/10/2024	12/11/2024	12/12/2024	12/13/2024	12/14/2024	12/15/2024	Weekly Total
Task	STRIKE	STRIKE	STRIKE	STRIKE	N/A	N/A	N/A	17
Hour Count	4	6	4	3	0	0	0	
Approximate Total Hours: 480								

Image 1.4, see Appendices for the full document.

Throughout the process, a few units were modified for a variety of reasons. One such unit, the I-Beam inserts, was changed during the build process to allow the cable to pass through more easily. We built custom-length cables for the four stacked units. The center truss also went through a large shift as the final pre-install tests were completed. All previous versions of the center truss had only needed one controller output, but the decision was made to use all four available outputs, which allowed for a better wiring split and a lower total cable footage. As a result, we had to shift the addresses of the units and break them out across four universes. Incidentally, this solved a control issue, specifically the splitting of control parameters across multiple universes, during the final install. Down the line, the change also allowed us to efficiently troubleshoot a power supply problem that resulted from the divided system. Looking at another unit, the Studio 54, or Sun sign, was modified due to a mistake in my cable measurements, meaning we moved the control board from the tech gallery to a position underneath the mezzanine. This move turned out to be beneficial because we had to troubleshoot a series of shorts between the colors of the LED tape installed within, and we now had to travel a much shorter distance as compared to that between the first and third floors.

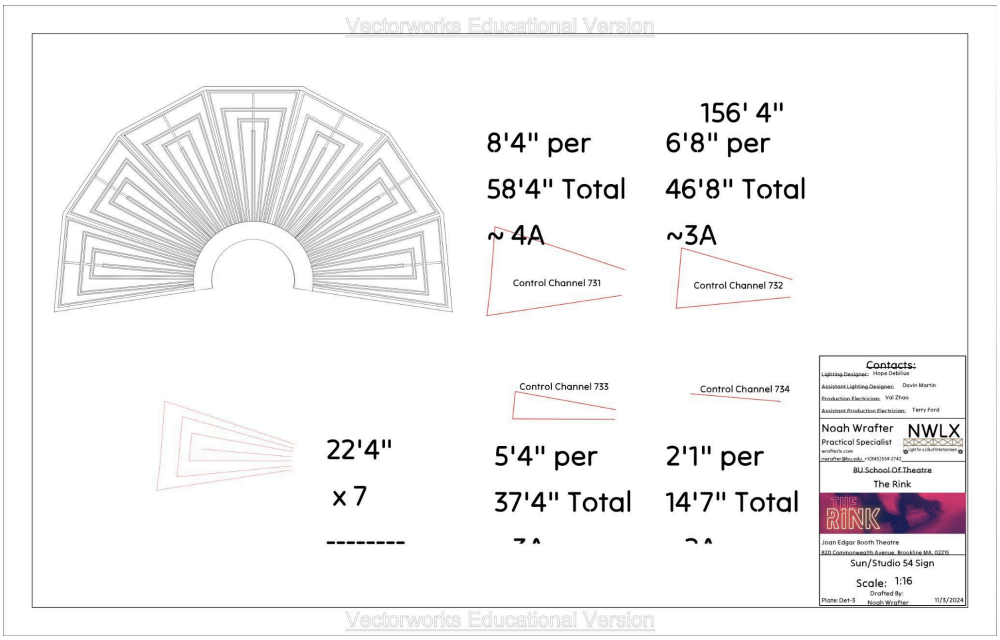

Image 1.5, see Appendices for the full document.

The end result of my work was ten practicals in the room, shaping the story of the *Rink* through the artistry of the design team. These units were used throughout the show and were paired with real neon signs donated by a local neon shop used in a lobby display. Overall, my work was received well, but I was given some feedback from my faculty and the design team. They asked questions such as: Why are some bulbs translucent and others not? Why is the center truss a different style of bulb than the other signs? These are all reasonable questions that we asked ourselves in the prep process, and we weighed against the factors discussed above before making a decision. The note I received most frequently was one I have heard many times before: Why does the LED tape pop on? This led to me beginning one of my research components: What does a DMX decoding dimmer actually output?

I spent a week testing every style of DMX decoder BU owns with five different LED tapes and one control with no load attached. All tests were done using the same 12V or 24V power supply, and DMX was sent from an ETC Element Console via its DMX 1 output and used the standard dimming curve. This revealed a few interesting things. The majority of the decoders we own jump to 5+ volts at 1% from the console. This clearly delineated the problem of popping sources very early on. But it also raised some questions for me. How much of the issue is internal to the dimmer versus what it is being told by the console, i.e, the DMX to percentage curve, and is this something that manufacturers can fix without charging a fortune? The test included two higher-end decoders, the first manufactured by Environmental Lights (EL) and the second by City Theatrical (CT). The EL decoder performed surprisingly badly compared to my expectations and showed why the unit using them for *The Rink* was problematic while dimming on and off.

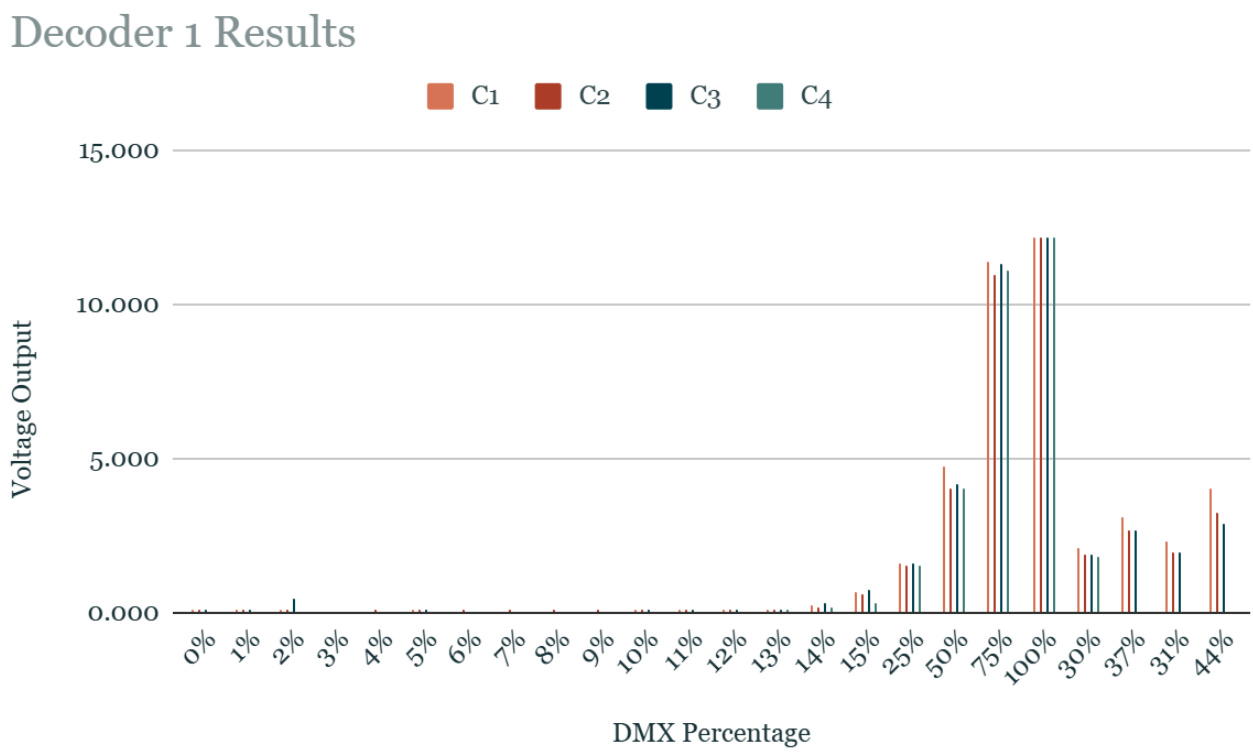

Image 4.1, see Appendices for the full document.

Tests revealed uneven voltage across its channels and a rapid curve from 0-1% in both 12V and 24V tests. The CT controller, in contrast, offered both even and consistent dimming across all three of the modes it internally offered. While it didn't fix the popping issue, it was significantly less noticeable when at a lower voltage than the rest, therefore reducing the output over the lower portion of the curve. These tests were expanded with additional dimmers and tape graciously provided by City Theatrical and Rosco.

I also reinvestigated a unit we had to cut during the early phases of the show, the rink outline. Originally slated to be ~92' of LED RGB or RGBW tape with the option for a high-density pixel controllable tape and control apparatus. The original plan was a flexible silicon channel on small wooden blocks around the lower edge of the stage lip to act as a detail and footlight for the lower playing space. It was originally cut due to the complexity of manufacturing and securing the wooden blocks, as well as an issue finding homes for the power supplies, controller, and cables under the limited clearance of the raised deck. Upon returning to the unit, I focused on the channel itself. We needed an option that was flexible enough for the corners but still fit the LED tape, and was made of a material capable of having holes punched in it to allow cables in and out. To solve the mounting issue, I found that 3D printing was the best option. This would have allowed us to both easily replace the angled blocks if they broke and print custom ones to fit the curves. This meant that we just needed a channel that could flex in the right direction. I ended up on a product from Wired4Signs that would fit 10mm tape. This channel and block solution, while outside the budgetary constraints, would have offered a strong solution to the problem.

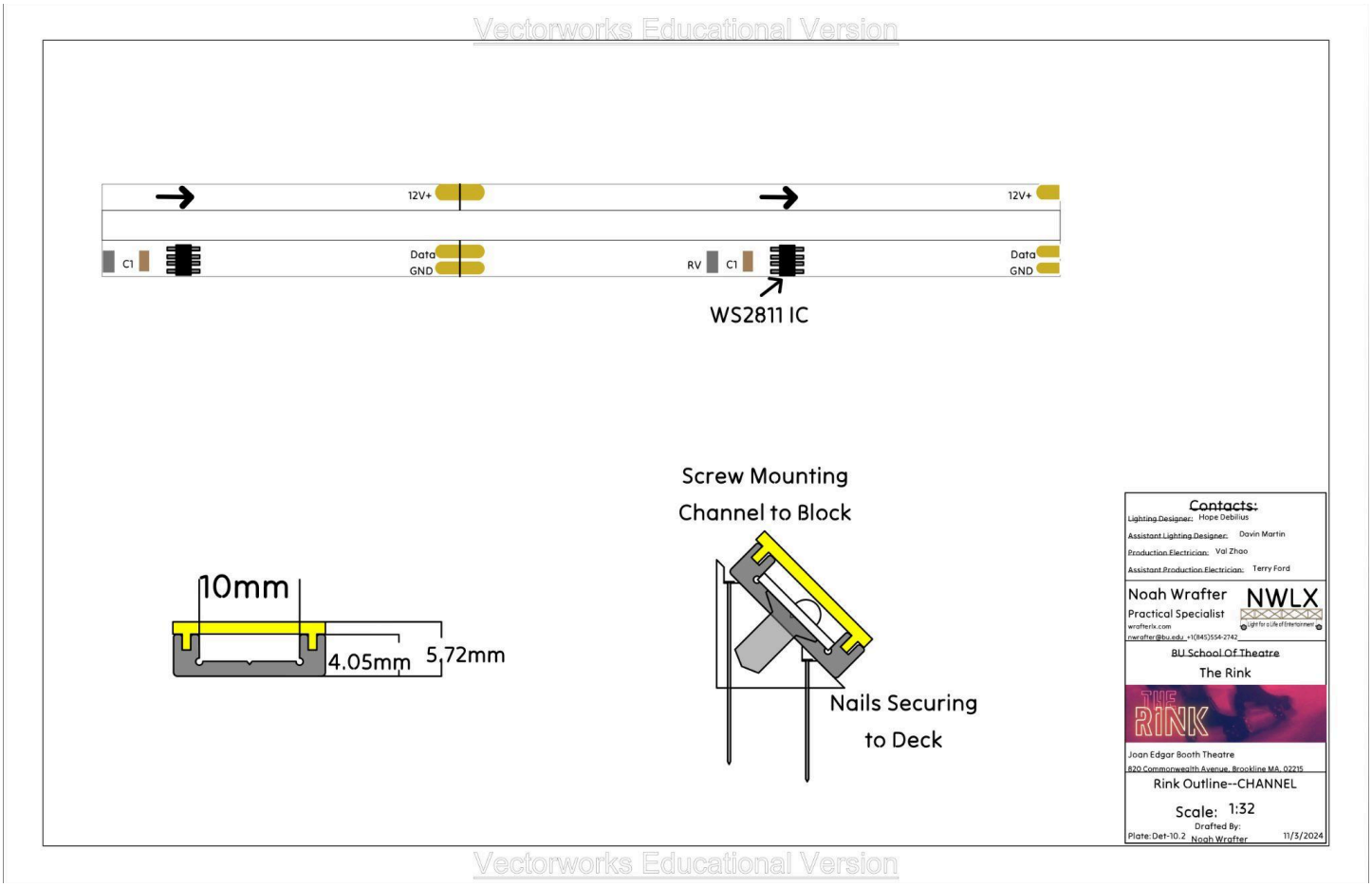

Image 1.5, see Appendices for the full document.x

In the end, *Rink* was a huge learning curve for me and set me up for the remaining parts of my thesis extremely well. Forcing me to learn about a variety of technologies as discussed above, it set me on the path I pursued with the remaining portions of my thesis and heavily influenced projects like *Emilia*.

Case Study - "Emilia" Produced by the Boston University School of Theatre

Part of a rep production series, *Emilia*'s design team and director wanted to explore light within the cast's control. In collaboration with the Lighting Designer, I designed a handheld puck using an ESP32 board and pixel lights by Neopixel to achieve this request. The original goal was 13 of these lights, with one per cast member. Due to budgetary constraints, we ended up with only four of these pucks. After going through the extended and disjointed process of *The Rink,* I strove to minimize the need to involve excess parties with my portion of these pucks. The primary involved parties were the lighting team and the props team. This made conversation and decision-making much simpler and allowed me to finalize plans in a matter of days instead of weeks. It also helped that I was able to recommend and use parts from my thesis exploration, like WLED software and sACN data methodologies.

Unit 1: Hand-Held

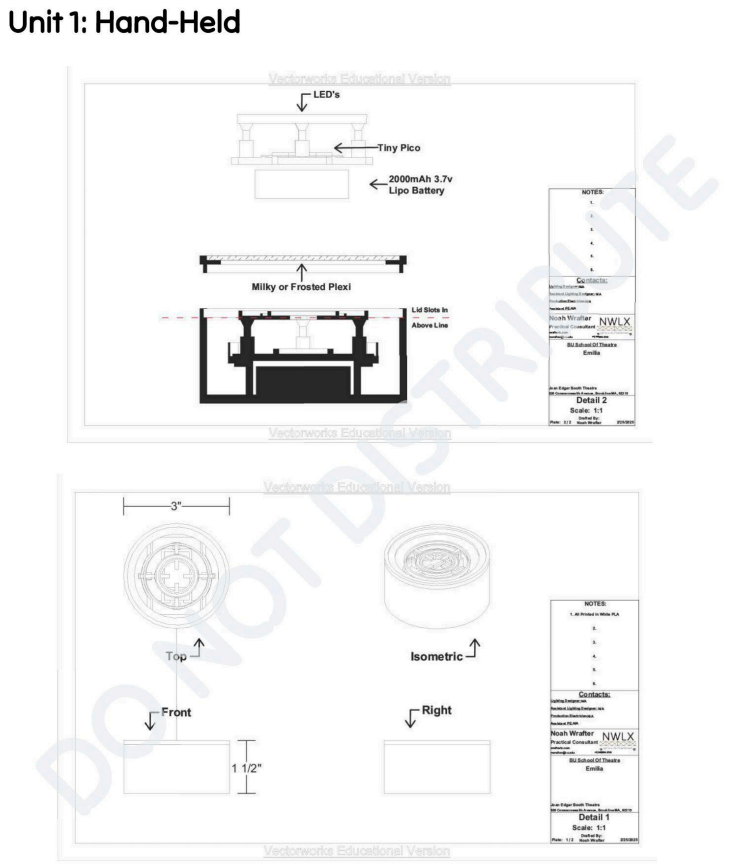

Image 2.1, see Appendices for the full document.

I chose to use higher-quality products for the pucks to increase reliability since I was less involved with this process, but this came at a significant cost compared to the budget available to me. I picked TinyPico ESP32 chips for their superior power efficiency and size in comparison to other processors, the semi-unique ability to directly output 5V power to the pixels from the board, and accept battery power directly into the board via a JST-PH connector. While there are other cheaper chips out there, these features and my confidence in the product from seeing it in use for similar applications led me to my choice. For the pixels, I had a relatively limited selection that could fit the size requirements. Having previously worked with Neopixel cells, their Ring and Jewel series felt like the obvious pick. I also looked at unbranded versions of the lights from an Amazon seller, likely factory direct, before screen printing, and resellers on Aliexpress. The cost differential was minimal, and the knowledge that Neopixel chips were binned, plus they had a warranty I could rely on if there was an issue, was what made it worth the extra cost in the end.

Component Costout

#1- Single Unit

Item	Quantity	Cost (x1)	Cost (Total)	Link
Tiny Pico ESP32 Chipset	1	$21.95	$21.95	LINK
Neopixel Ring 16 RGB	1	$9.95	$9.95	LINK
Neopixel Jewel 7 RGBW	1	$6.95	$6.95	LINK
3.7V Battery 2000MAH	1	$9.49	$9.49	LINK
300-500ohm resistor	1	$7.99	$7.99	LINK
Battery Charger	1	$9.99	$9.99	LINK
			$0.00	LINK
	Practical Total:		$66.32	

#2- Thirteen Units

Item	Quantity	Cost (x1)	Cost (Total)	Link
Tiny Pico ESP32 Chipset	13	$21.95	$285.35	LINK
Neopixel Ring 16 RGB	13	$9.95	$129.35	LINK
Neopixel Jewel 7 RGBW	13	$6.95	$90.35	LINK
3.7V Battery 2000MAH	13	$6.73	$87.46	LINK
300-500ohm resistor	1	$0.00	$0.00	LINK
Battery Charger	3	$9.99	$29.97	LINK
			$0.00	LINK
	Practical Total:		$622.48	

#3- Ten Units

Item	Quantity	Cost (x1)	Cost (Total)	Link
Tiny Pico ESP32 Chipset	10	$21.95	$219.50	LINK
Neopixel Ring 16 RGB	10	$9.95	$99.50	LINK
Neopixel Jewel 7 RGBW	10	$6.95	$69.50	LINK
3.7V Battery 2000MAH	10	$6.69	$66.88	LINK
300-500ohm resistor	1	$0.00	$0.00	LINK
Battery Charger	2	$9.99	$19.98	LINK
			$0.00	LINK
	Practical Total:		$475.36	

#4- Ten Units w/ Offbrand Chips

Quantity	Cost (x1)	Cost (Total)	Link	
10	$21.95	$219.50	LINK	
2	$18.99	$37.98	LINK	
2	$15.99	$31.98	LINK	
10	$6.69	$66.88	LINK	
1	$0.00	$0.00	LINK	
2	$9.99	$19.98	LINK	
		$0.00	LINK	
Practical Total:		$376.32	Unbranded LEDS	For 10, w/ 3 supplied by Noahs Thesis

#5- Four Units

Item	Quantity	Cost (x1)	Cost (Total)	Link
Tiny Pico ESP32 Chipset	4	$21.95	$87.80	LINK
Neopixel Ring 16 RGB	4	$9.95	$39.80	LINK
Neopixel Jewel 7 RGBW	4	$6.95	$27.80	LINK
3.7V Battery 2000MAH	4	$6.50	$25.99	LINK
300-500ohm resistor	0	$7.99	$0.00	LINK
Battery Charger	1	$9.99	$9.99	LINK
			$0.00	LINK
	Practical Total:		$191.38	

#6- Four Units w/ Inventory

Item	Quantity	Cost (x1)	Cost (Total)	Link
Tiny Pico ESP32 Chipset	2	$21.95	$43.90	LINK
Neopixel Ring 16 RGB	3	$9.95	$29.85	LINK
Neopixel Jewel 7 RGBW	2	$6.95	$13.90	LINK
3.7V Battery 2000MAH	4	$6.50	$25.99	LINK
300-500ohm resistor	0	$7.99	$0.00	LINK
Battery Charger	1	$9.99	$9.99	LINK
			$0.00	LINK
	Practical Total:		$123.63	

Image 2.1, see Appendices for the full document.

WLED allows a large range of options for the control of LEDs and control external to the software. Internally supporting most varieties of control protocols, such as the WS28 series chips by World Semi, and their brother variant APA chips, SK series chips by OPSCO, and TM series chips by Titan Micro Electronics, as well as direct PMW drive, and direct network drive via DDP(Distributed Display Protocol), or Artnet. WLED offered an effective and easy base to build off of for any user, making it a perfect choice for this application, where I had to hand off the management to another team. WLED has a robust internal control panel and menu for the lights, allowing you to control them with any Wi-Fi-enabled device. The software also allows you to send control to the processor running WLED and control externally. Directly integrated is control via MQTT(Message Queuing Telemetry Transport), Philips Hue, and Alexa, allowing control of most commercial/residential lighting systems. But you can also configure a serial input for things like wired DMX, or network DMX via E1.31 (sACN-streaming Architecture for Control Networks) or Artnet standards. A more advanced user can even take it as far as a custom network control setup with the option to configure a port of your choice to receive data over the network.

Type	Alternatives	Channels	Bits per channel	Wires	Max pixels when 32 ports or less	Max pixels when > 32 ports	Supported On Remotes	Notes
WS2811	APA104 APA106 CS8812 GS8202 GS8206 GS8208 INK1002 INK1003 LB1908 LPD1882 LX1203 P9883 SK6812 (RGB) SK6813 SK6822 SM16703 SM16711 SM16712 TM1803 TM1804 TM1809 TM1812 TM1914 UCS1903 UCS1904 UCS1909 UCS1912 UCS2903 UCS2909 UCS2912 UCS9812 WS2811 WS2812 WS2813 WS2815 WS2818	3	8	3	1024	704	Y	
APA102	APA101 APA102 APA102C HD107S SK9822	3	8	4	766	526		
APA109	APA109 SK6812 (RGBW) SK6818 SM16704 UCS2904 WS2814	4	8	3	768	528	Y	These expect 4 channels of input data per pixel.

Image 2.2, see Appendices for the full document.

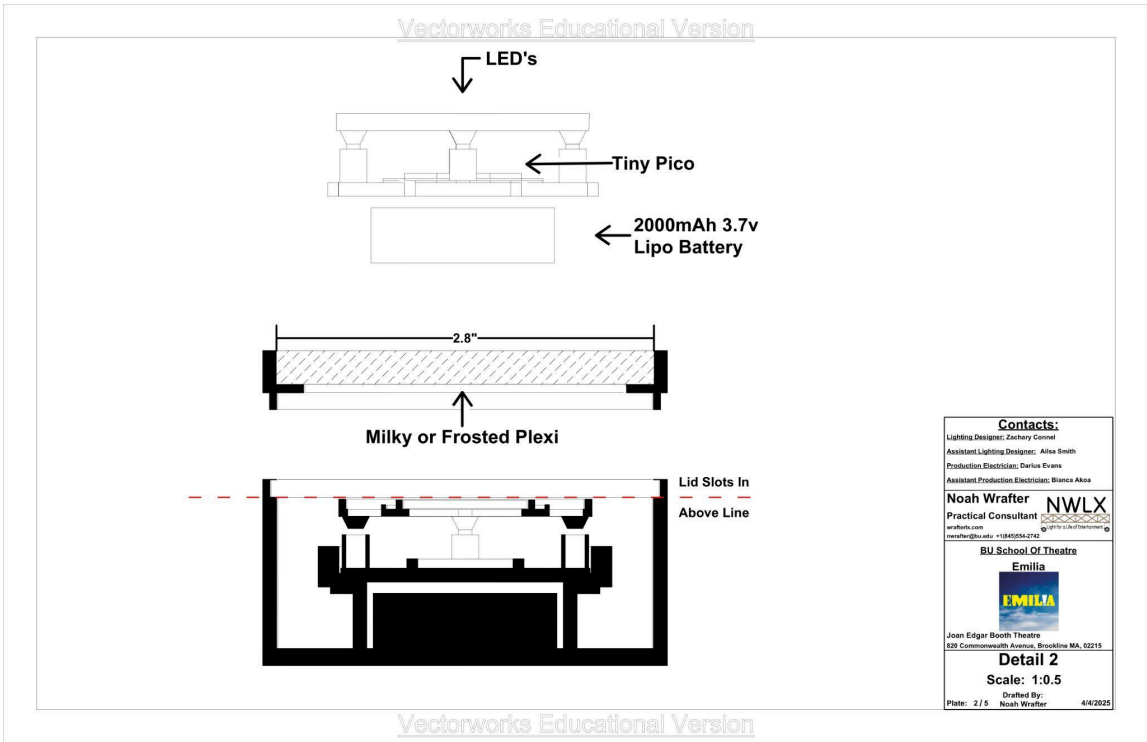

Image 2.3, see Appendices for the full document.

The physical specifications of the pucks were primarily influenced by the internal components. The design team requested they be handheld and able to be painted, an easy enough request in the larger scale of the project. To hold the electronics, I designed a two-piece 3D printed chassis consisting of a small ring with legs to hold the LED chips and an identically sized holder for the pico with slots for the legs on the ring to slot into. This creates a compact, palm-sized micro-light that is the center of the pucks. The puck itself was designed to fit the micro-light and a battery while leaving room for some air movement and a lens to be mounted in the lid to help shape the light. The final design used a friction-based slot system to hold the lid in place and a cutout for the plexiglass to be glued into as diffusion. The battery lives in a slot, the micro-light has a keyed home above it to help hold it stable. To keep everything solid, small dabs of hot glue were added to keep the legs securely seated in the lower half of the micro-light, and museum putty was added to the keyed section to help keep the micro-light from bouncing around as much.

Despite all the engineering of the pucks, one key oversight in their design was the ability, or lack thereof, to flip them upside down. As I previously described, the designs that landed on stage used a friction-fit mechanism reliant on the precision of the printing. The solution that was originally intended was threads to allow the caps to be more securely situated and support the weight of the internal components. Unfortunately, 3D printing threads with normal filaments (PLA or ABS) often are ineffective due to frequent failures during either printing or use. Attempts were made to source properly sized threaded inserts, but left unable to achieve this goal, a redesign of the print to use different materials, such as a resin, would be necessary for short-term use, and a custom milled insert for the threads long term.

To get sACN (E1.31) to the pucks, a 2.4GHz Wi-Fi solution was designed to hang in the center of the room. Physically speaking, the equipment was mounted to a wooden board, two clamps attached to it, and hung on the truss at the center of the room. On the board lived an AP, a POE Injector, and a combo Router/AP unit acting as a managed DHCP server. The lighting network in the space was sent into the Router, passed through to a second WAN port with a limited DHCP server attached to it. That output then passed through the POE injector and into the AP. The AP used requires a DHCP server dictating its use here. The pucks were also placed on a parallel network IP space to the console, using the subnet to divide them. This allowed the console to talk to the pucks, but not communicate back. A safety layer if someone were to access the network being created by the AP. In other research, it was discovered that BU owned a second solution to the SACN over wifi. City Theatricals Multiverse Transmitter, a dedicated wireless system manufactured for their hardware, has a function allowing it to open its normally hidden 2.4GHz and 5GHz networks and allowing the pucks to be paired to it. The exact functionality of this was not tested, but it could prove as a robust backup or primary option in rooms where Multiverse is already deployed.

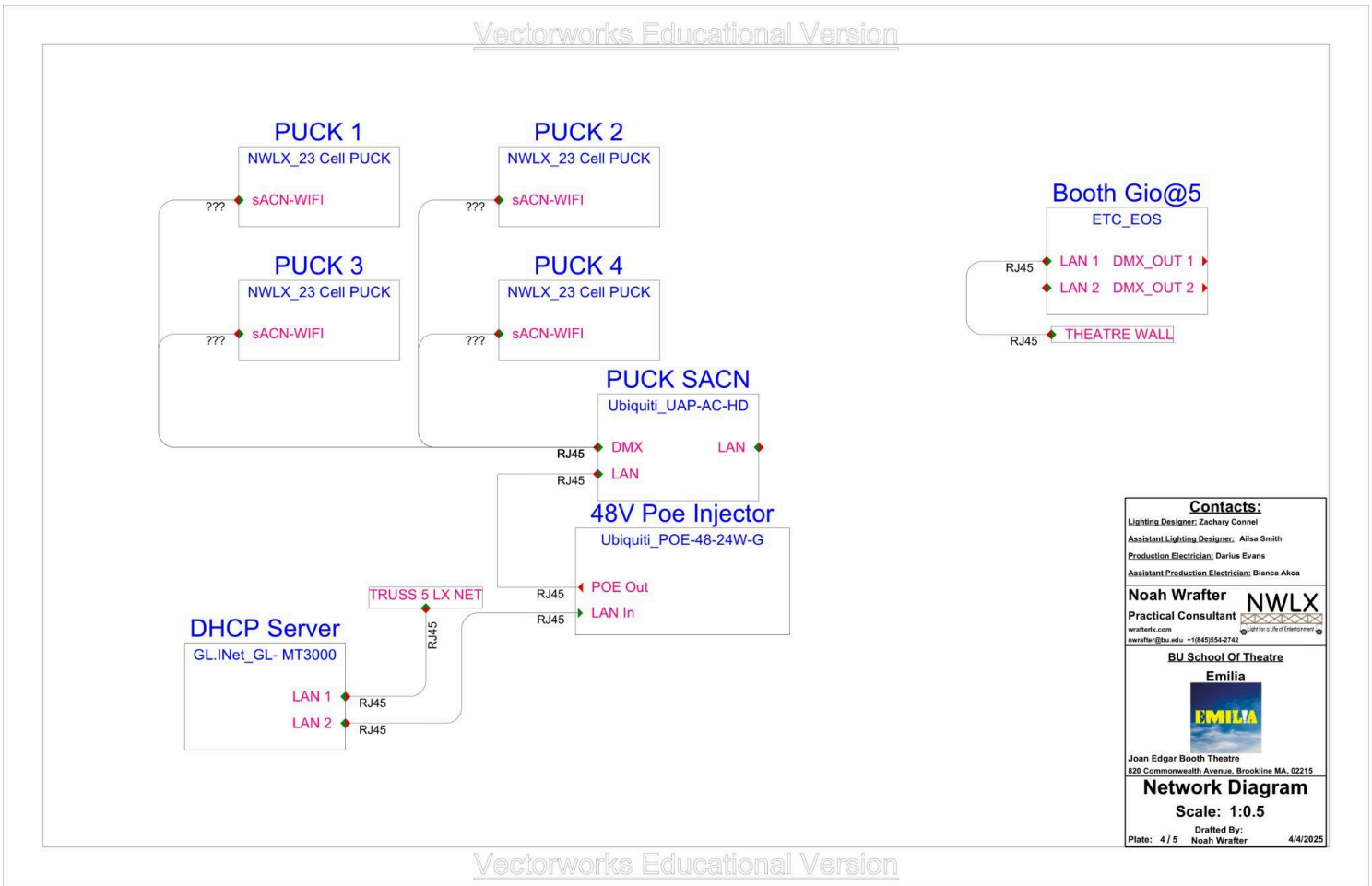

Image 2.3, see Appendices for the full document.

Research & Development- Light, Fabric, and Handheld Technology

The first of the R&D areas in my thesis was costumes and prop lighting. I focused on pixels within a design and how components can be integrated into a pre-existing design. Knowing the limited time I had, I targeted two costume ideas and a prop I had thought of previously. The first idea considered lights within a sleeve or the open end of a costume to create the effect of light pouring or shining out of the character. The second idea focused on exploring structured outfits like a corset/hoop-skirts and how lights could be attached to the boning to create effects, lines, and a boost to the visual structure within a costume. The third combines work from Emilia and Rink in the form of a mappable "flame" cell to allow a more controllable light within a lantern. These three ideas composed the final physical portions of this project and brought together the last disciplines targeted.

The Magic of Light–

Small pixel lights integrated into a costume sleeve, inspired by William Shakespeare's Prospero character from The Tempest. This was supposed to be as easy as sourcing a sleeve. It had the potential to be built if someone was interested. The LEDs I wanted to use were roughly 10 mm (0.4in) circles that could be stitched into the sleeve, facing both out and in.

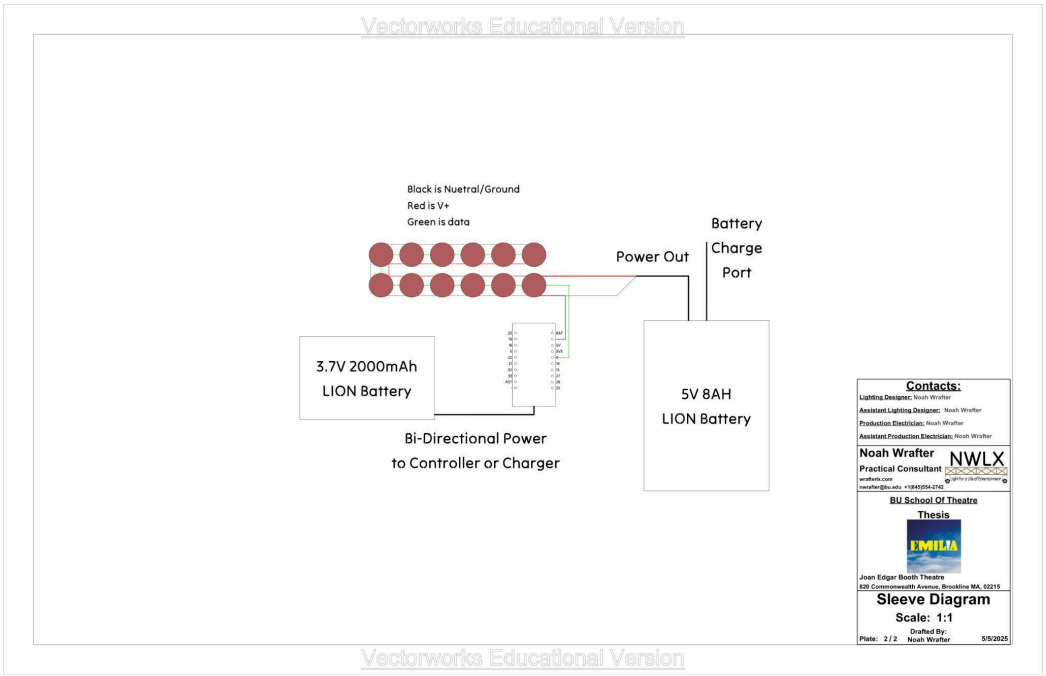

Image 3.1, see Appendices for the full document.

The realization of this idea is just as simple as its proposition. Twelve LED cells were oriented in a closed loop and stitched into the sleeve edge. The final implementation had them overlapping slightly, creating a brighter area in the loop. Purely for practical reasons, and created a halo-like effect of light emitting from the arm, a strong proof of concept for light being directed from a costume. This project, while simple, was an effective proof of concept for actor-controlled light within a costume and a fun experiment in wiring through a costume.

Lights within Structured ●utfits-

LEDs in a corset attached to the ribs was the big-scale idea. This one I knew was going to be more involved for a build team, and as such was an if possible idea. *Sweeney Todd, Starlight Express*, and *Murder Ballad* are the inspiration shows. That being said, the intent was not to link it specifically to a show, but to use the shows as an inspirational base towards which the final product could be shaped. A high-density tape was the LED source of choice for this; the tape is flexible and simple to attach to a costume with a few threads, and allows flexibility and rigidity to the piece.

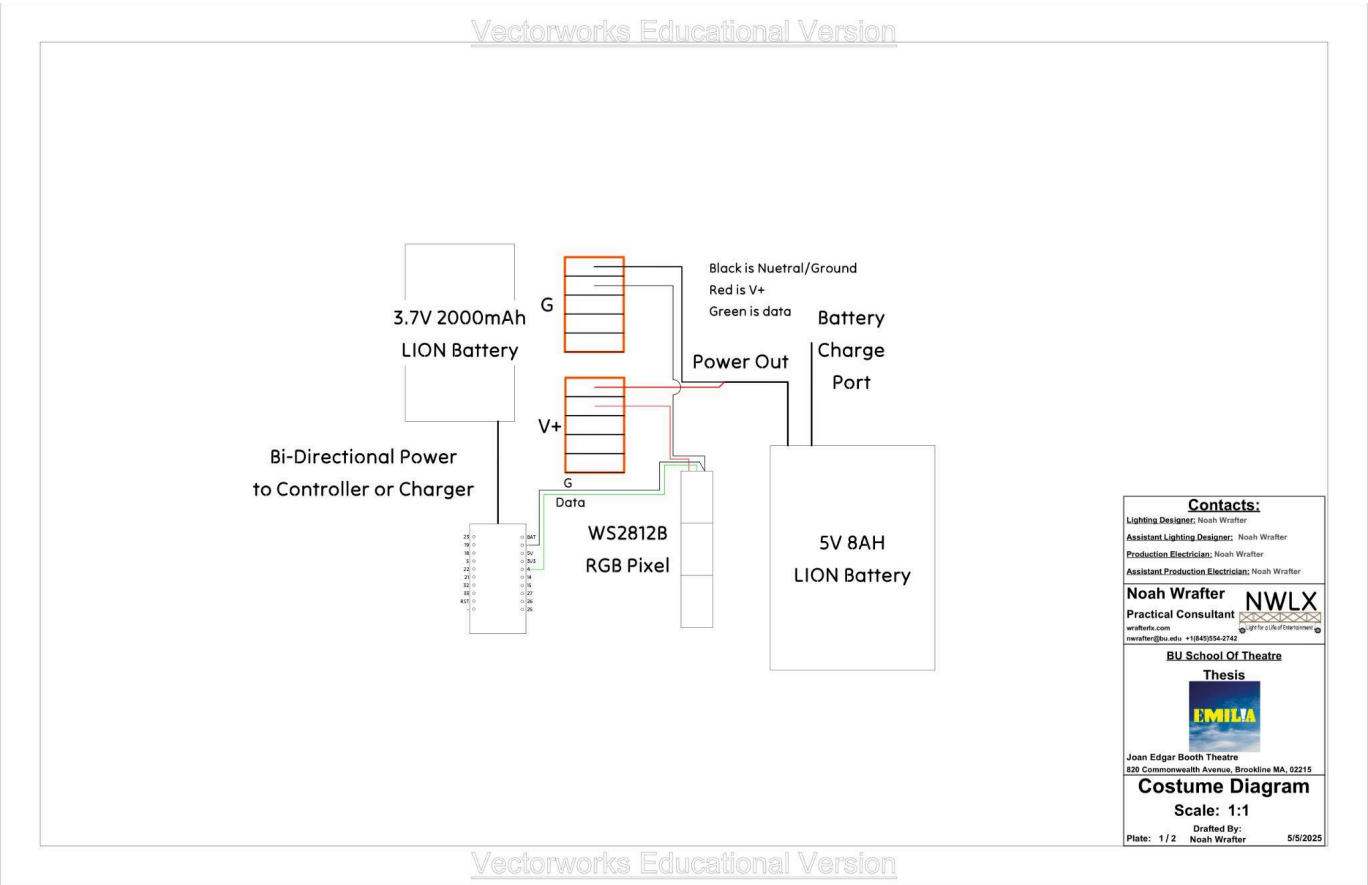

Image 3.1, see Appendices for the full document.

The final product utilized six 71-85 pixel long strands crossing at the center. This created an interesting mappable surface. The costume designers add layers of thinner fabric on top of the pixels as diffusion, hiding the sources and creating some semblance of depth within the costume. The actual control solution ended up shifting slightly because of the direction of the data flow of the pixels, but the idea stays the same. Data passes through where possible, but multiple GPIOs were used to split the address count within the universe limits. Overall, this was an extremely strong proof of concept, and the timing could not be better as other implementations of the same idea appear on larger stages, namely *Boop! The Musical* on Broadway and Beyoncé's new tour, reinforcing the project and my goals.

Flexible Flame-

A rectangular LED cell composed of 32 RGBW pixels, the cell is designed to mimic a flame in its color and intensity. This, while not targeted to a specific show like the others, is intended to be an experiment in visual mapping of pixels to represent a realistic image on stage.

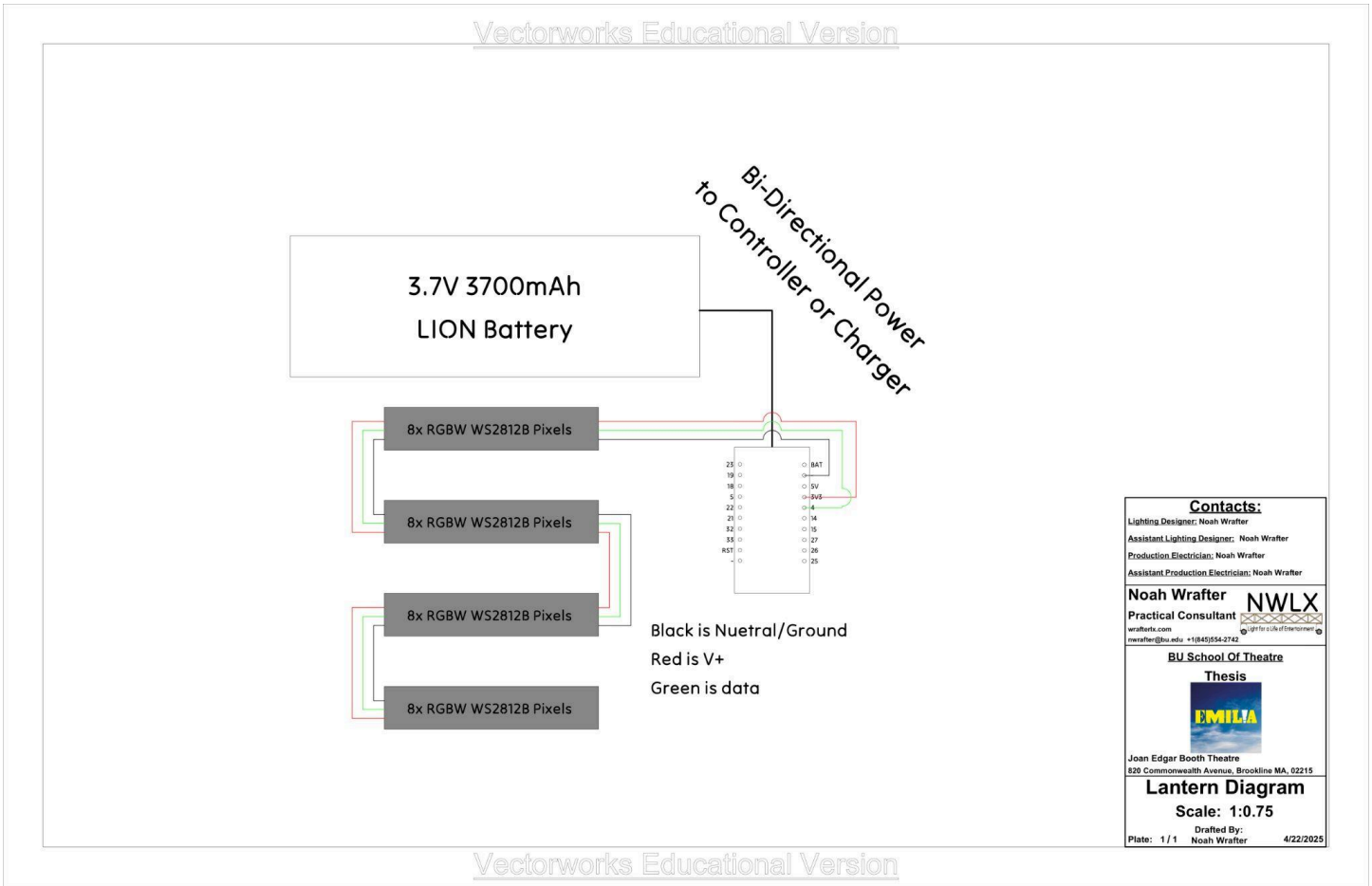

Image 3.2, see Appendices for the full document.

The implementation of the LEDS worked exceptionally well from a “as drafted” perspective, but the actual product was interesting at best. The lamp I chose to display in the cells had an extremely heavy diffusion, making the diffusion cell I printed unnecessary. This also proved the imagery idea and allowed me to create a fake flame within the lamp.

Research & Development- Dimmers, DMX Decoders, and Snappy LED Tape

Dimming can be as simple as a variable resistor and some copper. This tech powers the conventional fixtures we use and have used for years on stages around the world. In recent years, PWM, Pulse Width Modulation, has taken over, especially for LEDs. This uses an oscillating current or voltage, depending on the controller, to "dim" the LED. This is all affected by the load put on the dimmer, and throughout my test, you can see quite clearly that some of the decoders need resistance to dim properly, while others are consistent with or without a load attached. This made it exceptionally easy to determine what decoders were using PMW vs conventional dimming without knowing their model number or opening them up.

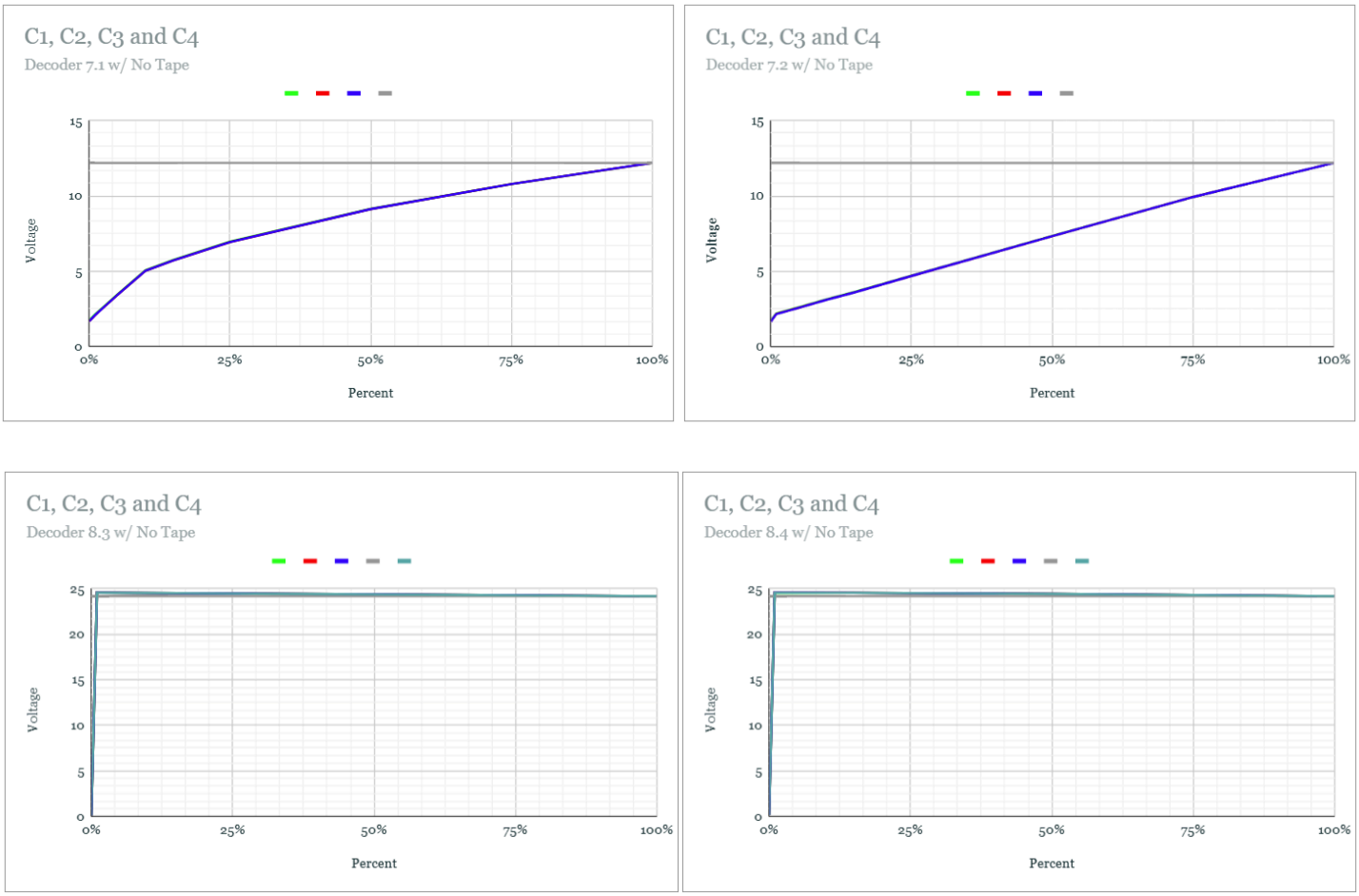

Image 4.1, see Appendices for the full document.

I entered this testing with the assumption that the LED tape would be the larger issue, since dimming is relatively simple, and LEDs are significantly more complicated on paper. In reality, the dimmer makes a much larger difference than the LED tape. Manufacturers have a limited number of options for who makes LED cells, let alone ones of the size, voltage, etc, they want, meaning many manufacturers are using the same factories with different names stamped on them. In comparison, there are significantly more chip manufacturers and PCB assemblers.

This again was proven wrong since I was able to find 2 manufacturer-direct sellers of decoders, that are identical to large name brand ones, namely Sunricher, a Taiwanese company making City Theatricals, and Rosoco configurable dimmer, and selling them unbranded for half the cost. This also holds true for “no-name” brands on sites like Amazon, where you can find the same box from multiple brands.

No appendix entry

Overall, this research revealed a lot about the equipment BU owns and how decoders/dimmers work, and despite me not finishing all the tests I was hoping to, the results speak for themselves. Dimmers matter more; spend the money to get a nice curve. And don't be scared to adjust things in the console to solve your problems. There always will be a physical limit to what our equipment can do, and we should use all our tools to solve them, not just blame the tape or decoder. All the data generated is incomplete and measured in less than ideal conditions, creating a warped picture if this were to be scaled proportionally. Long-term testing should include measurement of things like Amperage, Frequency, PMW width (where applicable), and lumens/lux per color, and total, as well as testing at every DMX or console value, not just the ones I used here. This would be extremely intensive, which is why it was not done for my thesis, and requires a much higher accuracy testing setup to guarantee accurate measurements to produce the full picture of the dataset hoped for.

In Conclusion-

LEDS worked exceptionally well for a variety of tasks. If you have the time and control parameters, pixels can revolutionize how your lighting shapes a space. This thesis has taught me so much technically and physically about low-voltage equipment, control systems, and experimentation. However, the most important takeaway for me is not to be afraid to try something. None of what I did would have been possible if I hadn't taken a risk, and that's what motivated me to keep trying new things.

Glossary of Terms-

ABS:

A thermoplastic polymer typically used for injection molding or 3D Printing applications, preferred for its cheapness, ease of manufacturing, and heat resistance up to 60 ºC

Artnet:

A TCP/IP protocol designed to transport large quantities of DMX data over a network connection using UDP packets

DDP:

Distributed Display Protocol, designed by 3WayLabs, with real-time lighting display synchronization in mind, using a higher efficiency packet method than other network formats

DHCP:

Dynamic Host Configuration Protocol, a network protocol that automatically assigns network configuration parameters to devices on a network

DMX:

Digital Multiplex, an RS-485 serial standard for transmitting data between lighting controllers and fixtures using "universes" to dictate packets of data

E1.31 or sACN:

Streaming Architecture for Control Networks, a network-based multiplex system for transmitting multiple universes of DMX over IP using UDP packets

MQTT:

Message Queuing Telemetry Transport, is a lightweight, open-source protocol designed for IoT (Internet of Things) applications. It uses a publish/subscribe model for efficient communication, particularly in low-bandwidth, high-latency environments.

PLA:

Polylactic Acid is a biodegradable bioplastic derived from renewable resources like corn, cassava, or sugar cane. Popular for 3D printing due to its ease of use, low cost, and environmental friendliness, it is also used in various other applications like food packaging, medical devices, and textiles.

Glossary of Terms (Continued)-

PWM:

Pulse Width Modulation, a digital technique that controls the average voltage level of a signal by varying the duration of on time (pulse width) within a fixed time, creating the intensity we see, and flicker in cameras

Resistive Dimming:

Voltage variance through adding or removing resistance to dim a light source

UDP:

User Datagram Protocol, a network protocol used for data transmission and known for its speed and efficiency, particularly in time-sensitive applications, but it doesn't guarantee reliable delivery or packet order

Universe (DMX):

A set of 512 individual DMX channels, acting as a single stream of data for controlling lighting fixtures. Consists of 512 Bytes of data plus a start and break bit at each end.

WLED:

An open-source code base for ESP32/ESP8266 webserver to control NeoPixel (WS2812B, WS2811, SK6812) LEDs, or also SPI-based chipsets like the WS2801 and APA102!

Appendix:

1 - “Red Devil”

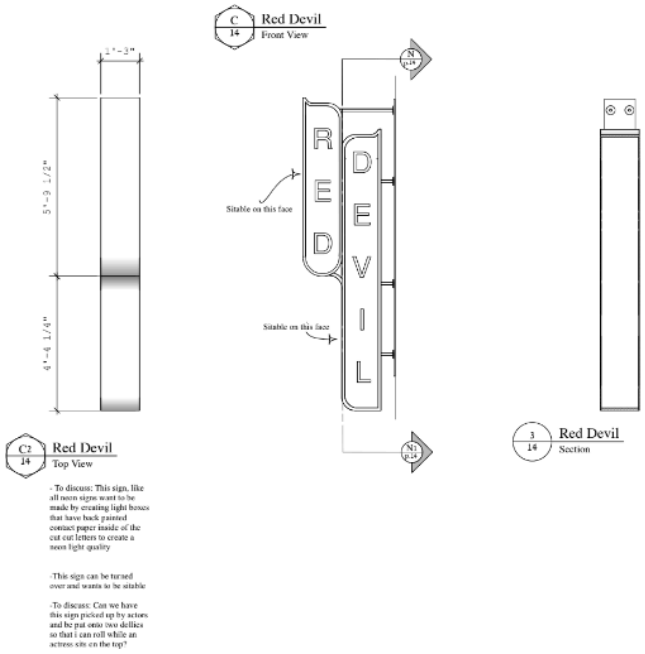

- ~10’ x 2’
- Wireless
- LED Tape
- Maybe LX Box
- Avg ~20” per 8 letters = 13.3’
- 36’ LX Box perimeter
- Moved a lot, tossed around
- Light from letters only
- Outer edge?
- Double sided

7	16’ Red Neon tape	$18
3	12v battery	Stock
1	Wireless DMX	Stock
2	LED Decoders	Stock

8	A19 LED?	Stock
8	A19 Sockets	Stock
1	Battery unknown volt	?
2	LED Decoders	Stock

2 - Luna Bar Inset

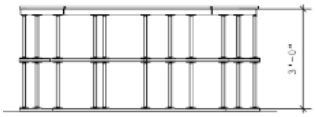

B2 / 14 Luna Park Bar
Side View

- LUNA park sign on the top, pipes and wooden lower shelves

-needs to be able to slide on the rink floor

-shelf under counter to hold props

-embedded in surface of table under plexi surface-
twinkle lights

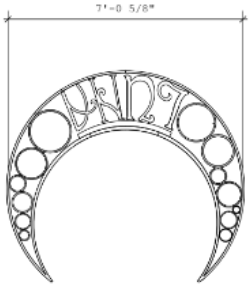

B / 14 Luna Park Bar
Top View

- ~7’ Diameter
- Wireless
- “Twinkle”
- **Pixel Diodes** or pixel tape
- ~~~18’ Luna~~
- Outline of moon is what’s lit
- ~40’ perimeter
- Bulbs embedded in plexi?

1	30’ Pixels	Stock
1	Pixel decoder (small)	$12
1	Wireless DMX	Stock
~2	12v Battery	Stock

1	Battery Christmas Lights	$17

3 - Entryway Awning LED Trapezoids

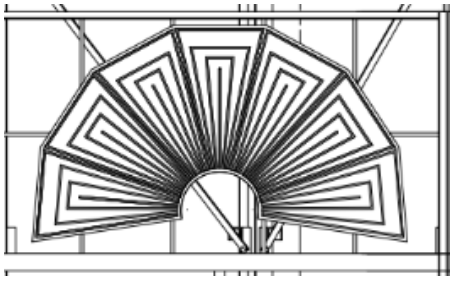

- LED Neon
- Maybe LX Box
- ~25’ tape per section x 7 sections = 175’
- ~3’6” perimeter x 7 sections = 24’ 6”

11	16’ RGB Neon Tape	$20
4	LED Decoders	Stock

3	16’ Cool White LED Tape	$15
2	LED Decoders	Stock

21	A19 Bulbs	Stock
21	A19 Sockets	Stock

4 - Skating Directions Timetable Board

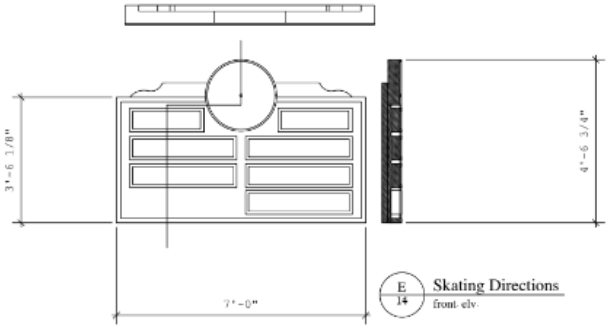

- ~7’ x 3’ 6”
- 8 LX Boxes
- ~57’ 8” total perimeters
    - ~7’4” perimeter per box
    - ~6’4” perimeter clock
- Black letters on lit background

4	16’ Warm White LED Strips	$15
2	LED Decoders	Stock

~16	A19 Bulbs	Stock
~16	A19 Sockets	Stock

5 - “Rent a Skate”

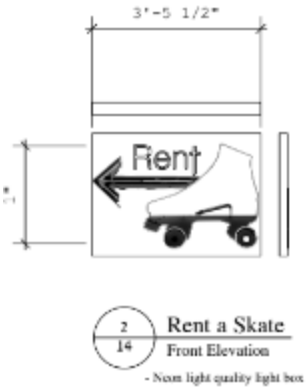

- Single Color
- LED Tape
- ~3’ 6” x 1’
- ~9’ perimeter
- LX Box
- It’s actually more neon than the skating directions

2	16’ White LED Strips	$15
1	LED Decoder	Stock

4	A19 Bulbs	Stock
4	A19 Sockets	Stock

6 - Arrow Sign

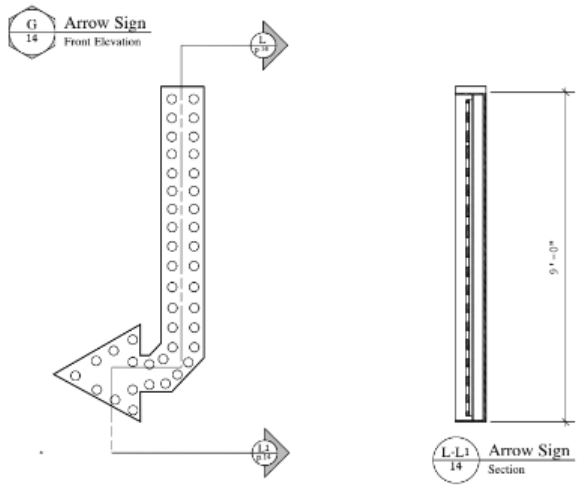

- Red marquee bulbs
- 43 Bulbs
- 9’ x 3’
- 5 ckts see Hope design

43	Red Carnival Bulbs	$30
43	Carnival Sockets	Stock

7 - “Antonellis”

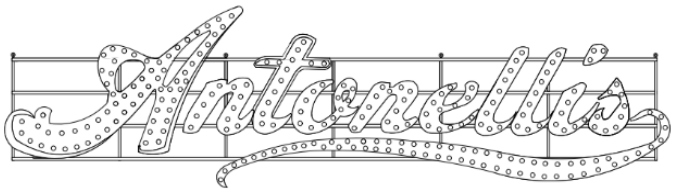

- White globe bulbs
- A Individual control
- Each letter, 4 for swoop (14 ckts)
- 238 Bulbs
- T with cool white LED tape
    - Lip for tape face audience
- ~29’ x 8’
- Will have prototype of the T

238	White Carnival Bulbs	$150
238	Carnival Sockets	Stock
1	16’ White Neon/COB LED Tape	$16
1	LED Decoder	Stock

8 - Center Truss

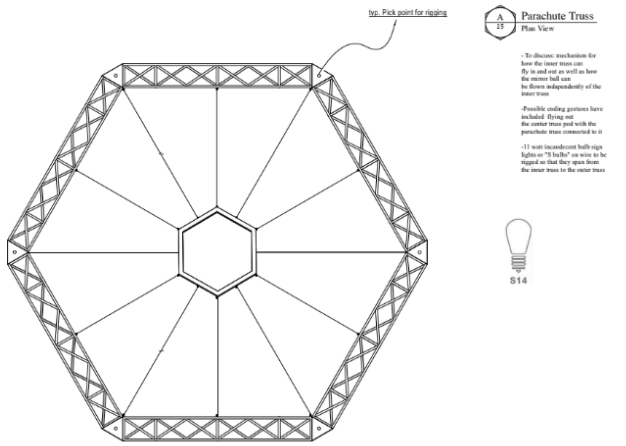

- Festoon bulbs on strings
- Individual chase
- 12x ~10ft
- Ping Pong Balls on pixels?
-

12	S14 Pixel Strands	$60
1	Pixel Decoder	Stock
1-2	12v Power Supply	Stock

36	10’ Festoon Strands 2’ Spacing	
	S14 Bulbs	

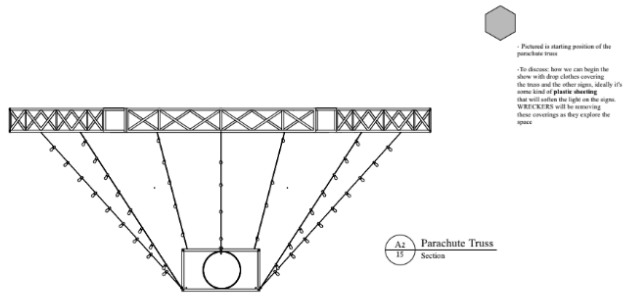

- https://www.alitove.net/product/led-pixels-lights/12v-led-pixels?product_id=132

9 - I-Beam Bulb Chases

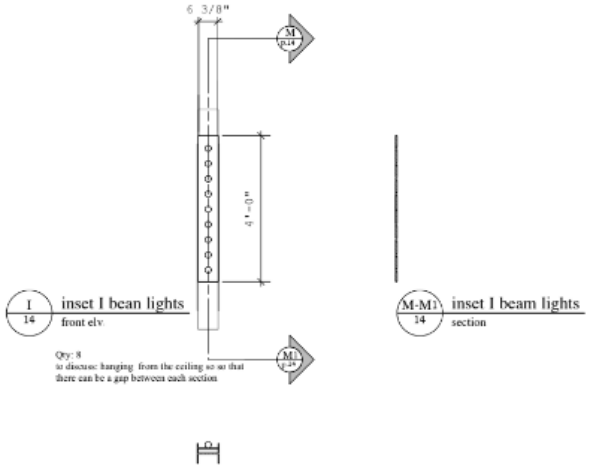

- 10x
- 9 bulbs each
- 3 ckts
- CMY, opaque

30	Cyan S14 Bulbs	
30	Magenta S14 Bulbs	
30	Yellow S14 Bulbs	
90	A19 Sockets	

10 - LED tape around rink

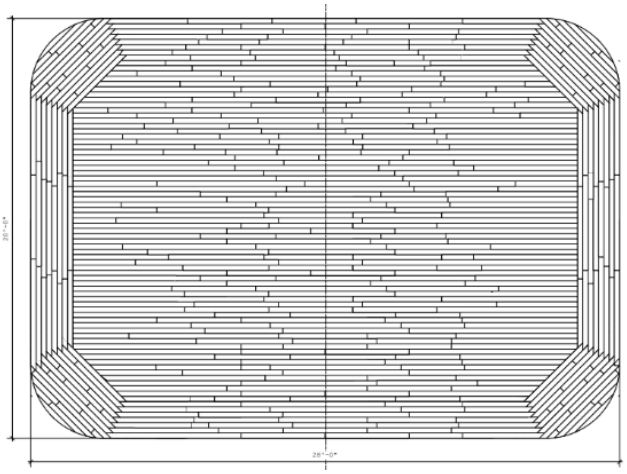

- 96’ perimeter

6	16’ RGBW Pixel Strips	$44
1	Pixel Decoder	Stock-ish
2	12v Power Supplies	Stock

6	16’ RGBW LED Strips	$23
6	LED Decoders	Stock

Rough Cost-Out

#	Practical	Ideal	Low
1	“Red Devil”	126	?
2	Luna Bar Inset	12	17
3	Entryway Awning LED Trapezoids	220	45
4	Skating Directions Timetable Board	60	?
5	“Rent a Skate”	30	?
6	Arrow Sign	~30	?
7	“Antonellis”	165	?
8	Center Truss	720	?
9	I-Beam Bulb Chases	~100	?
10	LED tape around rink	264	138
		$1700	

Practical Cost Out

Boston University School of Theatre

Joan Edgar Booth Theatre

820 Commonwealth Avenue, Brookline MA 02215

nwrafter@bu.edu, (845)554-2742

PLEASE READ- Notes About the Documentation

All prices are based on prices at the time of quote being written and does not include Tax, shipping, or any bulk handling fees that may be incurred

Quote does not include spares for items such as lamps, tape, etc

All items marked with an asterisk (*) may be fully or partially available from the LX Shop

All items followed by a “hash” (#) symbol may be shared between practical units

All items marked with STOCK, are expected to be available from the LX Shop, confirmation of quantities and availability will be made as soon as possible

Full Size Drafting plates and details are available at the end of the document

Light Box may be abbreviated to LB in some documentation

Table of Contents

Practical 1: Luna Bar Sign

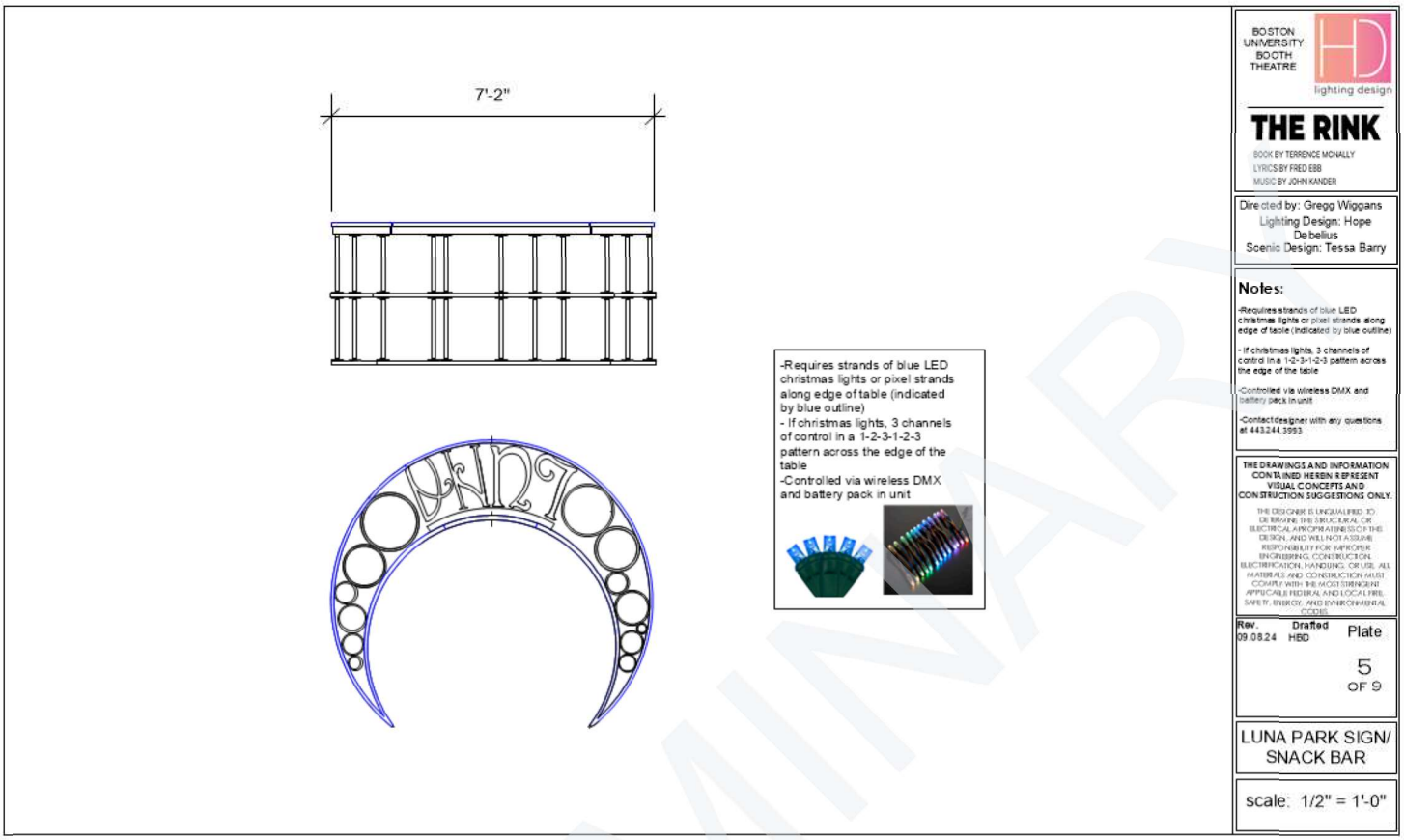

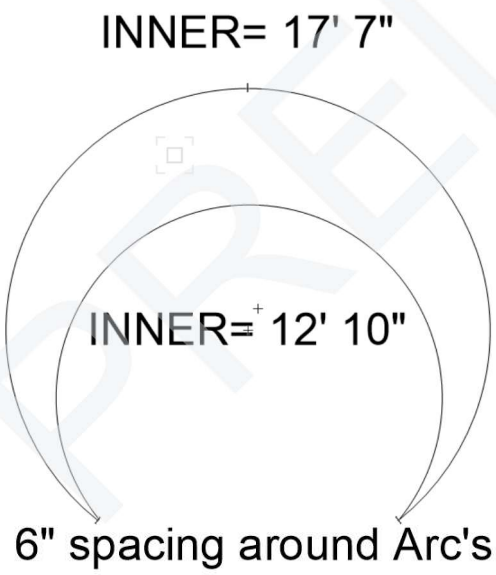

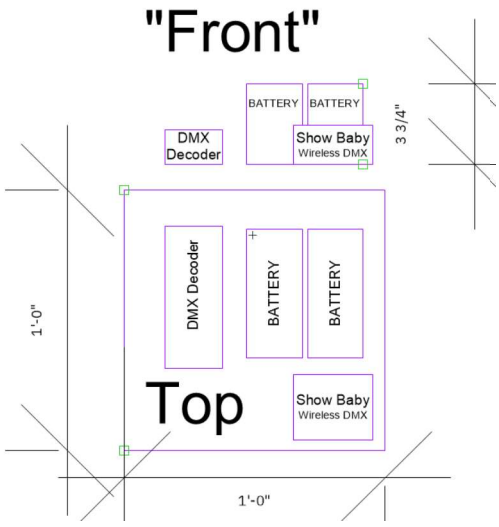

Component Costout

Option 1: Pixels

Item	Quantity	Cost (x1)	Cost (Total)	Link
Battery 12V*	2	$19.99	$39.98	LINK
Pixel Controller (Small)	1	$14.00	$14.00	LINK
Pixel String(30') 6-8" separation (STOCK)	1	$0.00	$0.00	LINK
Wireless DMX (STOCK)	1	$0.00	$0.00	LINK
Dc Charge port	1	$8.99	$8.99	LINK
Charge switch	1	$9.99	$9.99	LINK
			$0.00	LINK
32W max	**Practical Total:**		$72.96	

Option 2: Christmas Lights

Item	Quantity	Cost (x1)	Cost (Total)	Link
Battery 12V*	2	$19.99	$39.98	LINK
"Christmas" lights blue	3	$22.99	$68.97	LINK
DMX Decoder*	1	$22.29	$22.29	LINK
Wireless DMX (STOCK)	1	$0.00	$0.00	LINK
DMX 3-5 Convert*	1	$7.50	$7.50	LINK
Dc Charge port	1	$8.99	$8.99	LINK
Charge switch	1	$9.99	$9.99	LINK
2A per channel	**Practical Total:**		$157.72	

Practical 2: Red Devil Sign

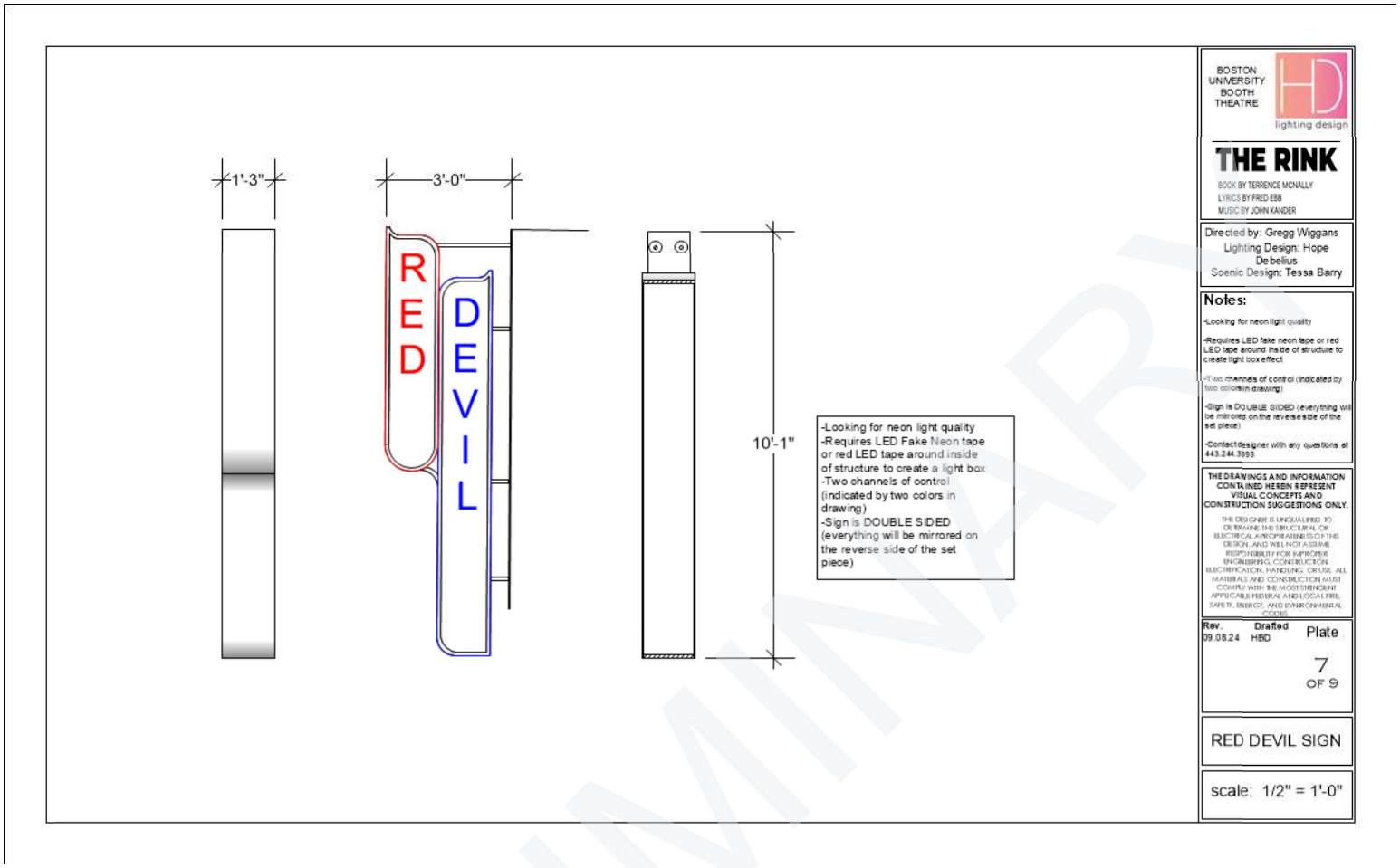

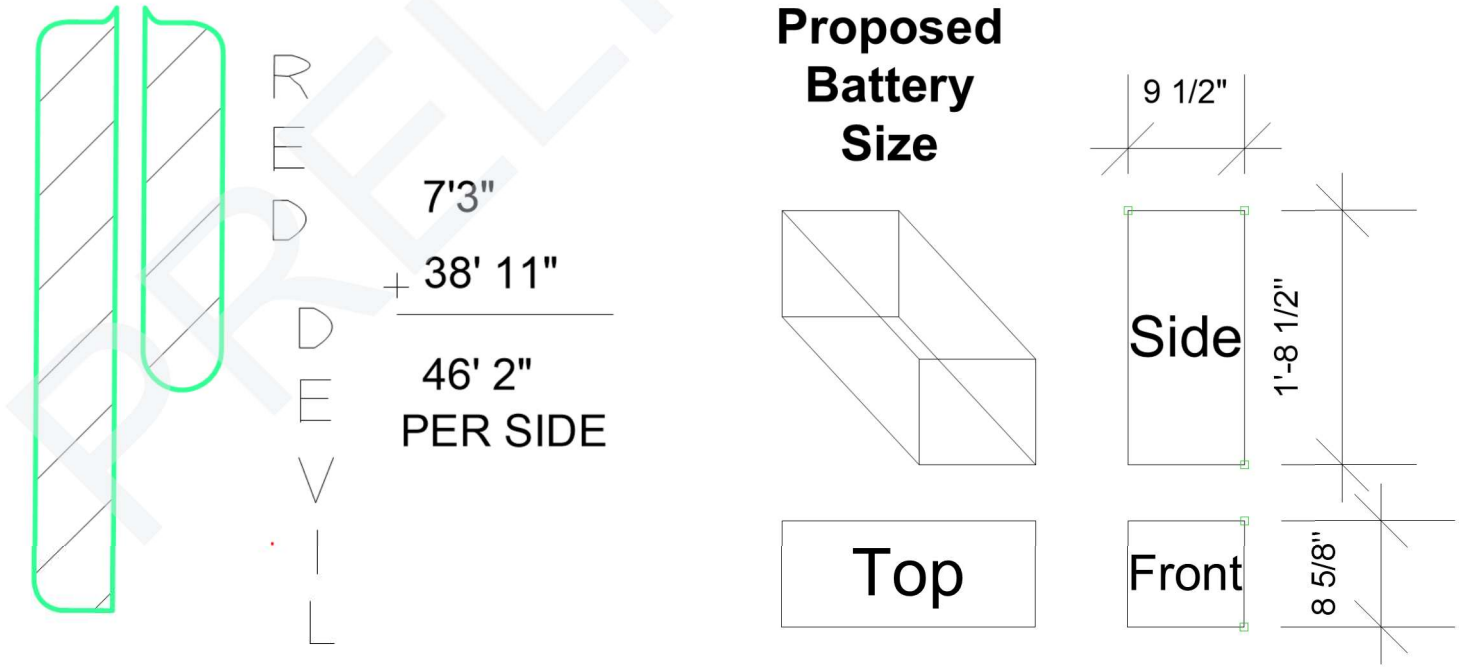

Component Costout

Option 1: Neon Tape

Item	Quantity	Cost (x1)	Cost (Total)	Link
Neon Red Tape	4	$9.99	$39.96	LINK
Battery 24V	1	$359.99	$359.99	LINK
DMX Decoder*	1	$22.29	$22.29	LINK
DMX 3-5 Convert*	1	$7.50	$7.50	LINK
Wireless DMX (STOCK)	1	$0.00	$0.00	LINK
battery Charger	1	$29.99	$29.99	LINK
Cabling (2 wire) #	1	$9.99	$9.99	LINK
8A controller, ~26AH, ~13AH per side, 2 wire universally, 50LB battery	**Practical Total:**		$469.72	

Option 2: LED Tape

Item	Quantity	Cost (x1)	Cost (Total)	Link
Red LED Tape	6	$15.99	$95.94	LINK
Battery 24V	1	$359.99	$359.99	LINK
DMX Decoder*	2	$22.29	$44.58	LINK
DMX 3-5 Convert*	1	$7.50	$7.50	LINK
Wireless DMX (STOCK)	1	$0.00	$0.00	LINK
battery Charger	1	$29.99	$29.99	LINK
Cabling (2 wire) #	1	$9.99	$9.99	LINK
8A Controller, ~20AH, 10AH per side, 50LB battery	**Practical Total:**		$547.99	

Practical 3: Sun/Studio 54 Entrance Sign

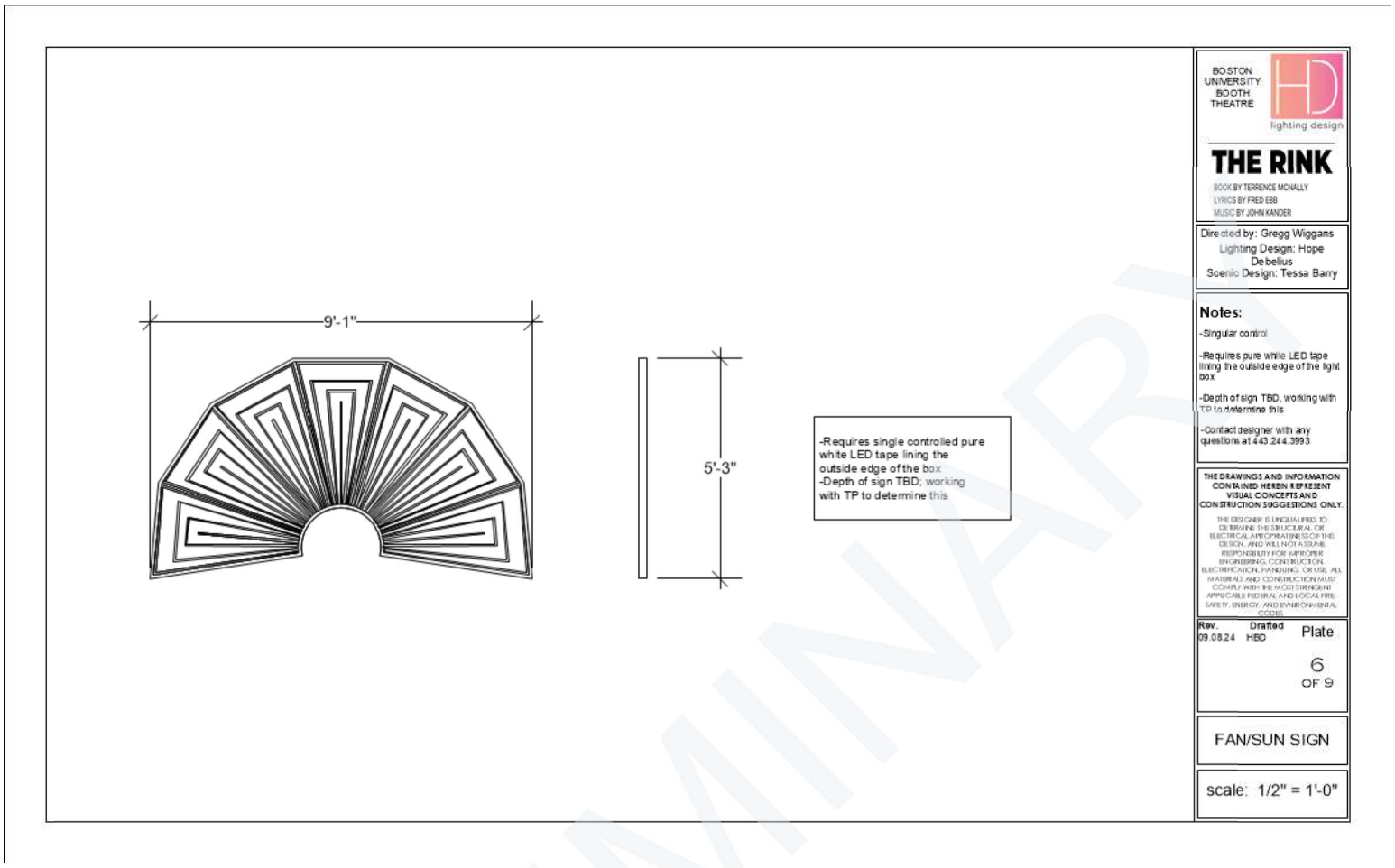

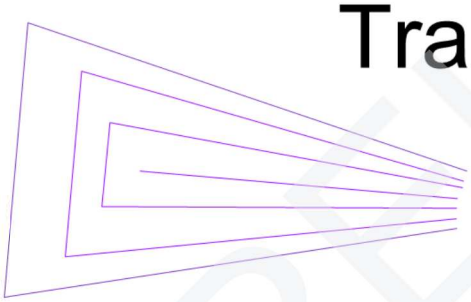

Trace- OPT1+2

TOTAL-Rounded

173'

24' 9" X7

Light Box Layout- OPT3

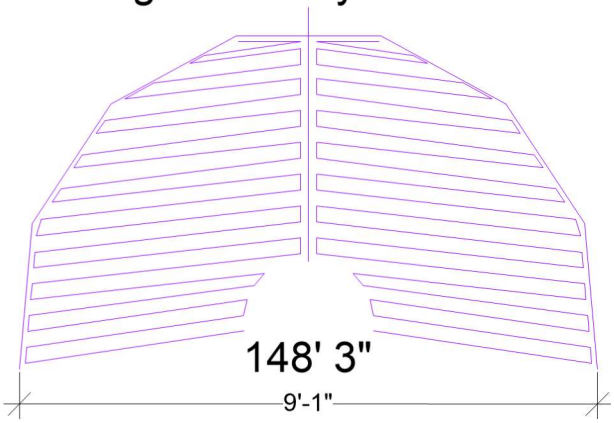

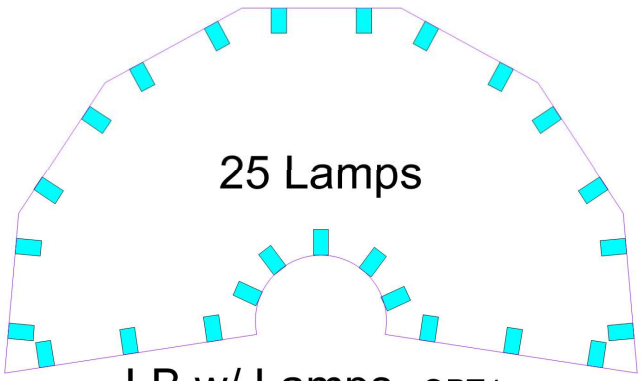

LB w/ Lamps- OPT4

Component Costout

Option 1: Trace w/ Neon Tape

Item	Quantity	Cost (x1)	Cost (Total)	Link
Neon RGB Tape	2	$99.99	$199.98	LINK
24V Power Supply (50A)	2	$85.99	$171.98	LINK
DMX Decoder*	3	$22.29	$66.87	LINK
DMX 3-5 Convert*	1	$7.50	$7.50	LINK
Cabling (4 wire) #	1	$9.99	$9.99	LINK
Wago (#)	1	$42.95	$42.95	LINK
Heatshrink (#)	1	$28.99	$28.99	LINK
Power input	1	$15.59	$15.59	LINK
Data Input	1	$43.63	$43.63	LINK
90A @ 24V, x3 8A decoders	**Practical Total:**		$587.48	

Option 2: Trace w/ LED Tape

Item	Quantity	Cost (x1)	Cost (Total)	Link
LED Tape Warm White	11	$18.99	$208.89	LINK
12V Power Supply (50A)*	2	$39.41	$78.82	LINK
DMX Decoder*	4	$22.29	$89.16	LINK
DMX 3-5 Convert*	1	$7.50	$7.50	LINK
Cabling (2 wire) #	1	$9.99	$9.99	LINK
Wago (#)	1	$42.95	$42.95	LINK
Heatshrink (#)	1	$28.99	$28.99	LINK
Power input	1	$15.59	$15.59	LINK
Data Input	1	$43.63	$43.63	LINK
65A @12V, x2 8A Decoder	**Practical Total:**		$525.52	

Continued on the Next Page

Option 3: Lightbox w/ LED Tape

Item	Quantity	Cost (x1)	Cost (Total)	Link
LED Tape Warm White	9	$18.99	$170.91	LINK
12V Power Supply (50A)*	2	$39.41	$78.82	LINK
DMX Decoder*	1	$22.29	$22.29	LINK
DMX 3-5 Convert*	1	$7.50	$7.50	LINK
Cabling (2 wire) #	1	$9.99	$9.99	LINK
Wago (#)	1	$42.95	$42.95	LINK
Heatshrink (#)	1	$28.99	$28.99	LINK
Power input	1	$15.59	$15.59	LINK
Data Input	1	$43.63	$43.63	LINK
53A @ 12V	**Practical Total:**		$420.67	

Option 4: Lightbox w/ Bulbs

Item	Quantity	Cost (x1)	Cost (Total)	Link
E26 Lamp Base*	25	$3.76	$94.00	LINK
Warm white Lamp, Unfrosted, 100W*	25	$4.80	$120.00	LINK
lamp cord*	1	$20.99	$20.99	LINK
Power input	2	$15.59	$31.18	LINK
			$0.00	LINK
			$0.00	LINK
			$0.00	LINK
			$0.00	LINK
			$0.00	LINK
2500W @ 120V, 2 Circuits Dimmable	**Practical Total:**		$266.17	

Practical 4: Skate Lightbox

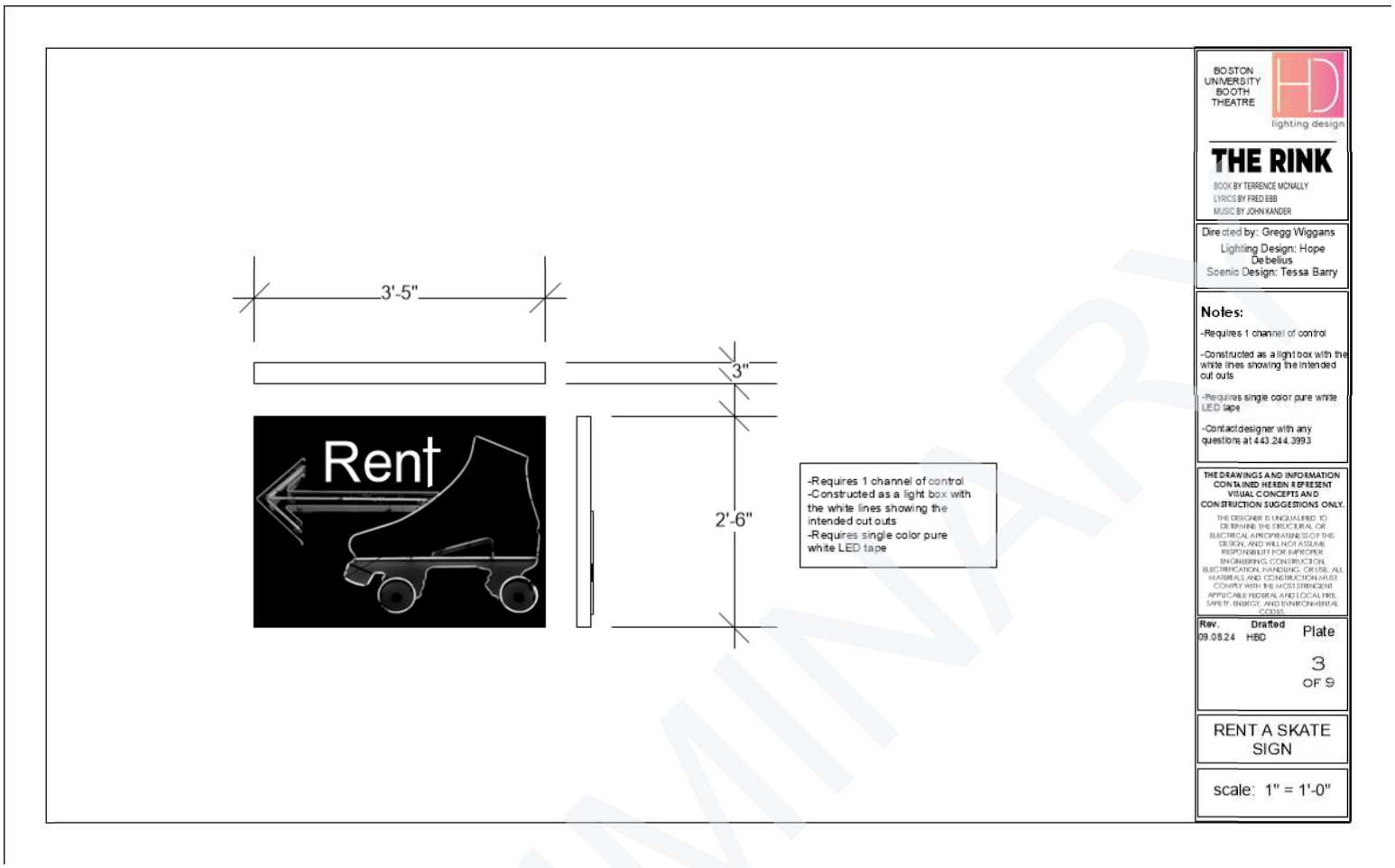

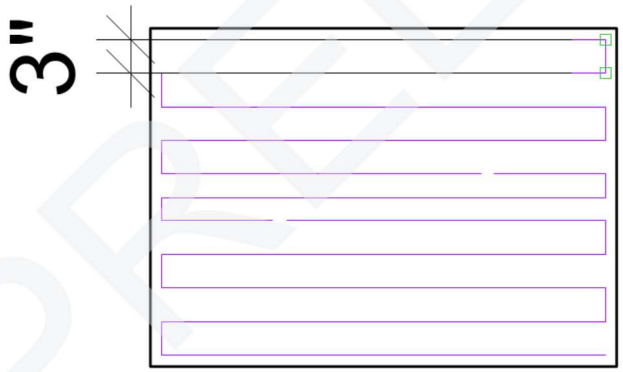

Light Box Layout
OPT1&2

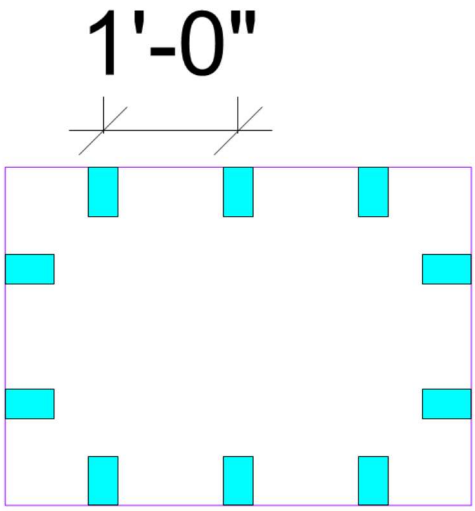

LB w/ Lamps
OPT3

Component Costout

Option 1:LB w/ LED Tape

Item	Quantity	Cost (x1)	Cost (Total)	Link
LED Tape Warm White	3	$18.99	$56.97	LINK
12V Power Supply (20A)*	1	$26.41	$26.41	LINK
DMX Decoder*	1	$22.29	$22.29	LINK
DMX 3-5 Convert*	1	$7.50	$7.50	LINK
Cabling (2 wire) #	1	$9.99	$9.99	LINK
Wago (#)	1	$42.95	$42.95	LINK
Heatshrink (#)	1	$28.99	$28.99	LINK
Power input	1	$15.59	$15.59	LINK
Data Input	1	$43.63	$43.63	LINK
14A @ 12V,	**Practical Total:**		$254.32	

Option 2:LB w/ LED Tape (RGB)

Item	Quantity	Cost (x1)	Cost (Total)	Link
LED Tape RGBWarm White	3	$32.99	$98.97	LINK
12V Power Supply (20A)*	1	$26.41	$26.41	LINK
DMX Decoder*	1	$22.29	$22.29	LINK
DMX 3-5 Convert*	1	$7.50	$7.50	LINK
Cabling (5 wire) #	1	$9.99	$9.99	LINK
Wago (#)	1	$42.95	$42.95	LINK
Heatshrink (#)	1	$28.99	$28.99	LINK
Power input	1	$15.59	$15.59	LINK
Data Input	1	$43.63	$43.63	LINK
19A @ 12V	**Practical Total:**		$296.32	

Continued on the Next Page

Option 3:LB w/ Bulbs

Item	Quantity	Cost (x1)	Cost (Total)	Link
E26 Lamp Base*	10	$3.76	$37.60	LINK
Warm white Lamp, Unfrosted, 100W*	10	$4.80	$48.00	LINK
lamp cord*	1	$20.99	$20.99	LINK
Power input	1	$15.59	$15.59	LINK
			$0.00	LINK
			$0.00	LINK
			$0.00	LINK
			$0.00	LINK
			$0.00	LINK
1000W @ 120V, 1 Dim Circuit	**Practical Total:**		$122.18	

Practical 5: Skater Directions Sign

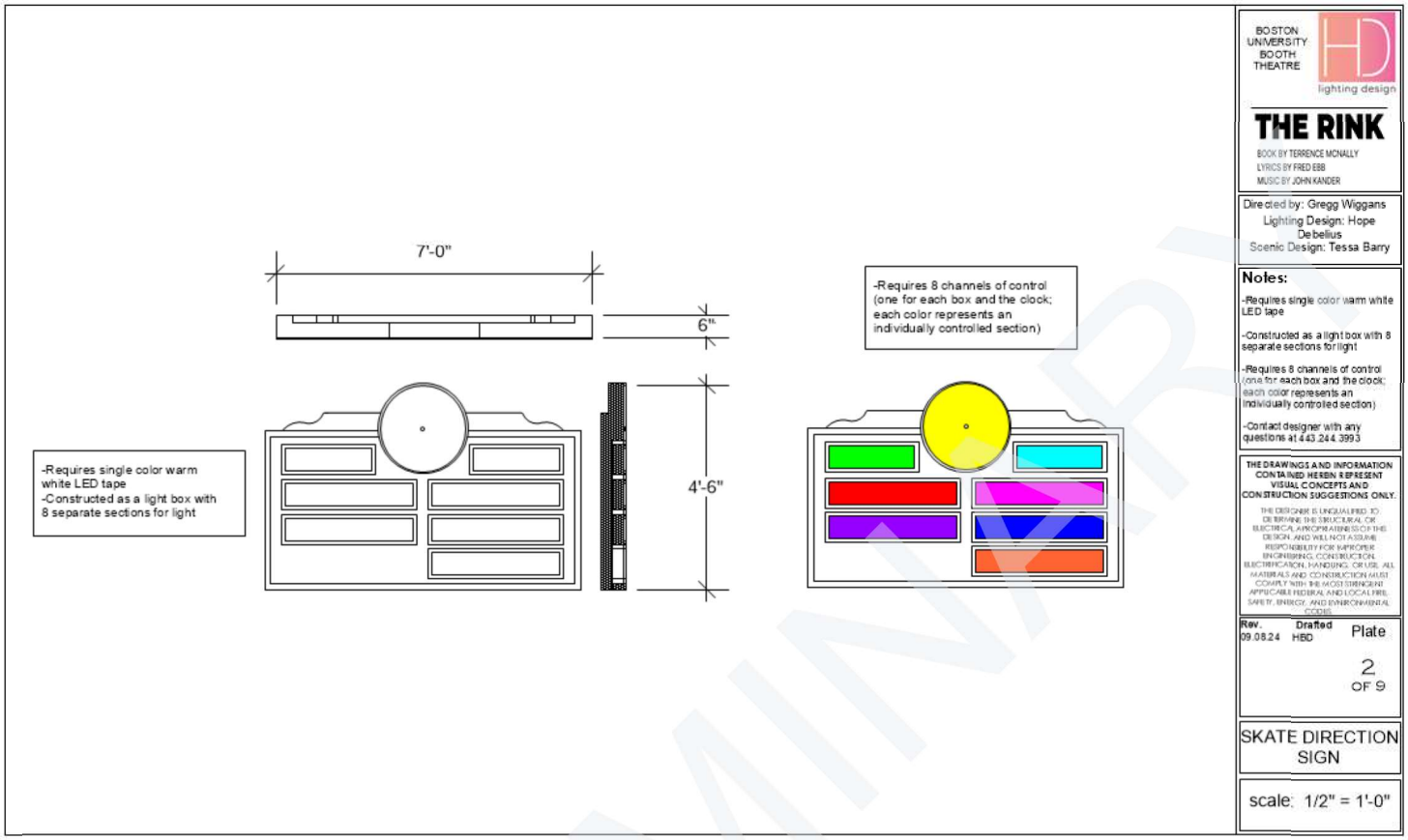

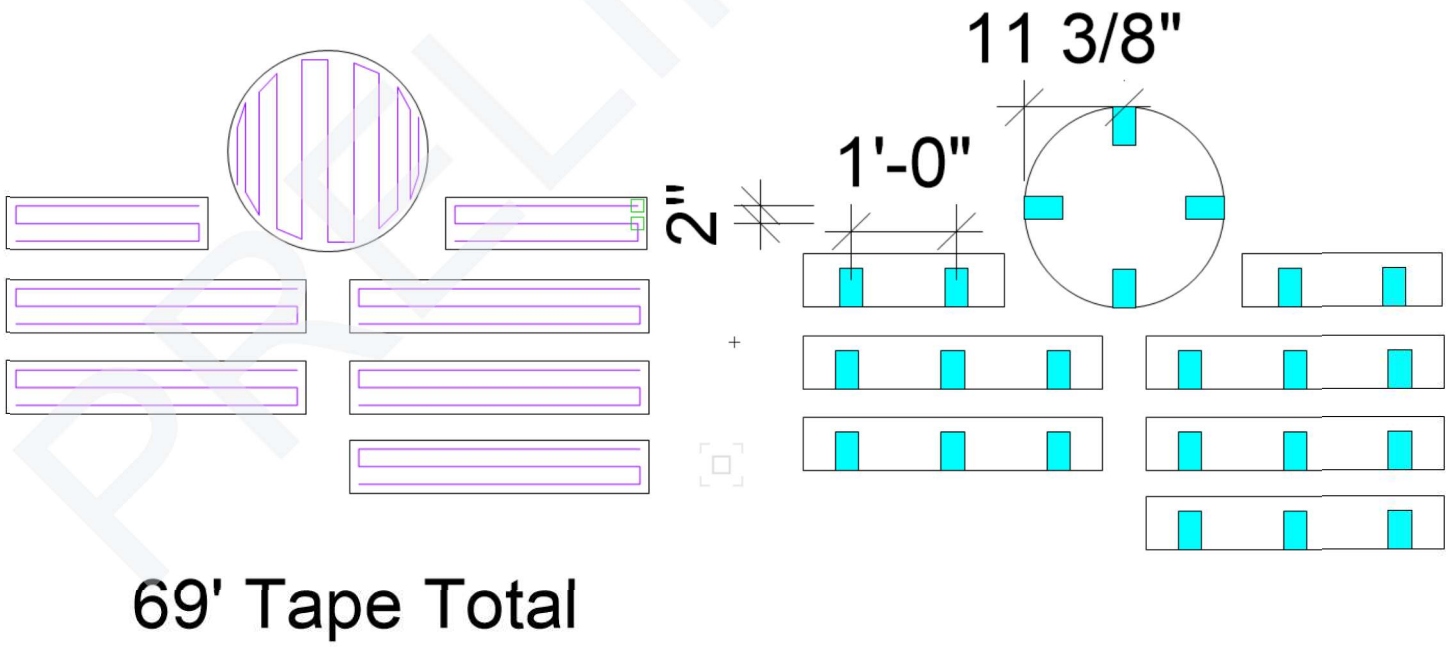

Component Costout

Option 1:LB w/ LED Tape (white)

Item	Quantity	Cost (x1)	Cost (Total)	Link
LED Tape Warm White	5	$18.99	$94.95	LINK
12V Power Supply (30A)*	1	$39.00	$39.00	LINK
DMX Decoder*	2	$22.29	$44.58	LINK
DMX 3-5 Convert*	1	$7.50	$7.50	LINK
Cabling (2 wire) #	1	$9.99	$9.99	LINK
Power input	1	$15.59	$15.59	LINK
Data Input	1	$43.63	$43.63	LINK
30A (29.2) @ 12V,	**Practical Total:**		$255.24	

Option 2:LB w/ LED Tape (RGBWw)

Item	Quantity	Cost (x1)	Cost (Total)	Link
LED Tape RGBWarm White	5	$32.99	$164.95	LINK
12V Power Supply (50A)*	1	$39.41	$39.41	LINK
DMX Decoder*	8	$22.29	$178.32	LINK
DMX 3-5 Convert*	1	$7.50	$7.50	LINK
Cabling (5 wire) #	1	$9.99	$9.99	LINK
Power input	1	$15.59	$15.59	LINK
Data Input	1	$43.63	$43.63	LINK
41A @ 12V,	**Practical Total:**		$459.39	

Continued on the Next Page

Option 3:LB w/ Bulbs (2 Circuit)

Item	Quantity	Cost (x1)	Cost (Total)	Link
E26 Lamp Base*	23	$3.76	$86.48	LINK
Warm white Lamp, Unfrosted, 100W*	23	$4.80	$110.40	LINK
lamp cord*	1	$20.99	$20.99	LINK
Power input	8	$15.59	$124.72	LINK
Edison Dimmer Pack *	2	$159.95	$319.90	LINK
			$0.00	LINK
			$0.00	LINK
2300W @ 120V, 2 Dim Circuit	**Practical Total:**		$662.49	

Option 4:LB w/ Bulbs (8 Circuits)

Item	Quantity	Cost (x1)	Cost (Total)	Link
E26 Lamp Base*	23	$3.76	$86.48	LINK
Warm white Lamp, Unfrosted, 100W*	23	$4.80	$110.40	LINK
lamp cord*	1	$20.99	$20.99	LINK
Power input	8	$15.59	$124.72	LINK
			$0.00	LINK
			$0.00	LINK
			$0.00	LINK
2300W @ 120V, 8 Dim Circuit	**Practical Total:**		$342.59	

Practical 6: Arrow Sign

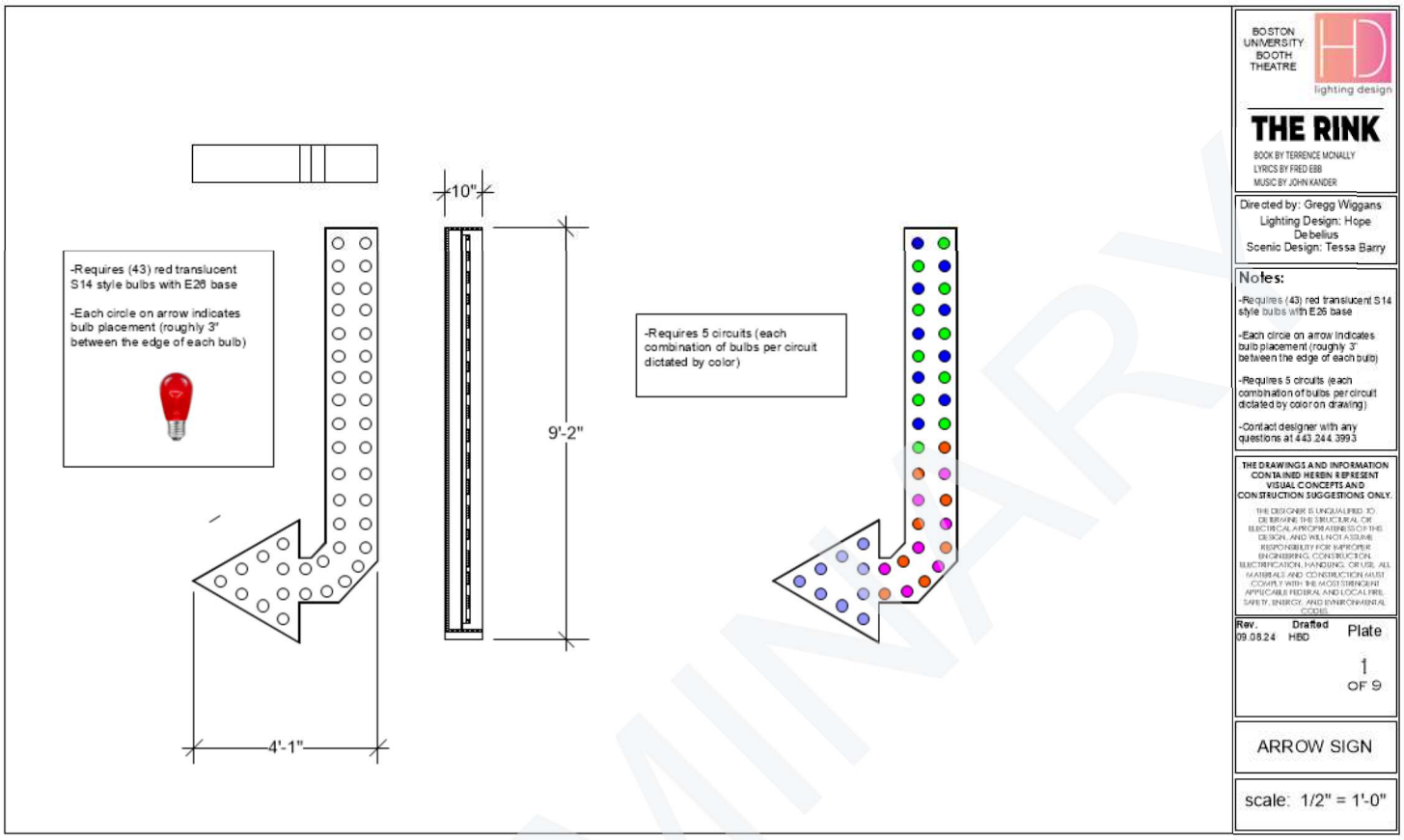

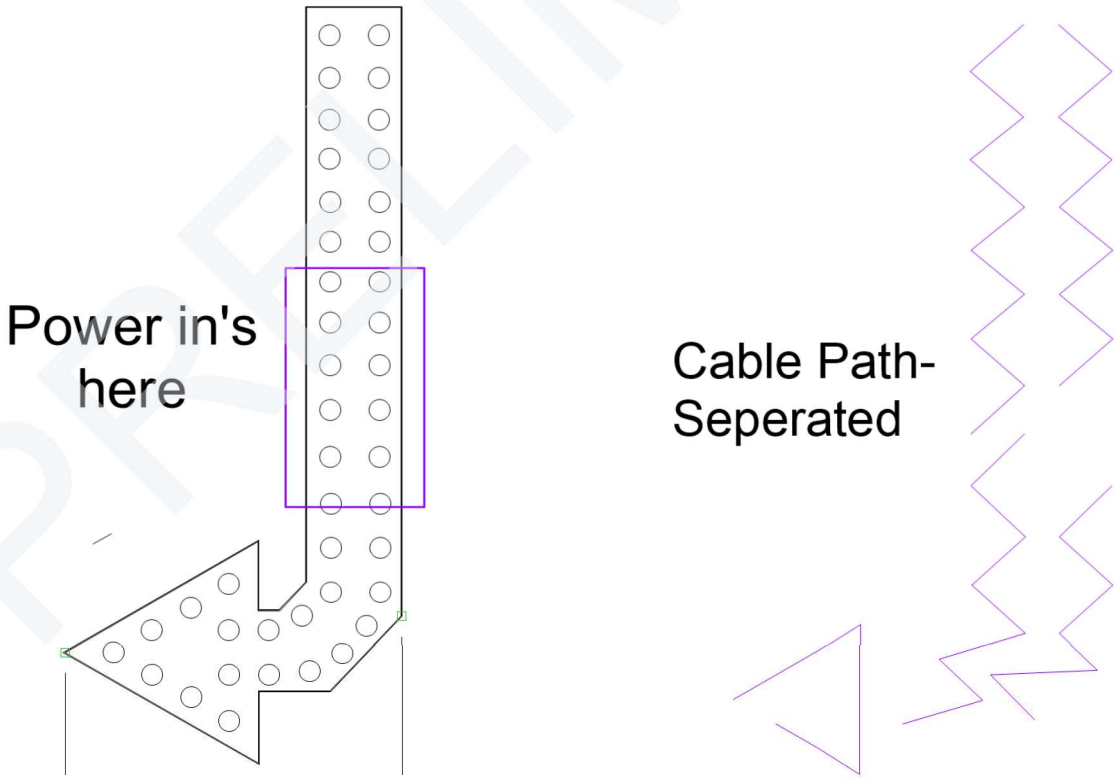

Component Costout

Option 1: Globe Lights

Item	Quantity	Cost (x1)	Cost (Total)	Link
String light- Candelabra base*	5	$15.99	$79.95	LINK
Globe Bulb- Candelabra base RED*	43	$0.96	$41.28	LINK
Power input	5	$15.59	$77.95	LINK
Edison Dimmer Pack *	1	$159.95	$159.95	LINK
			$0.00	LINK
			$0.00	LINK
			$0.00	LINK
2 Circuits, 100W max per circuit	**Practical Total:**		$359.13	

Practical 7: Antonelli's Sign!

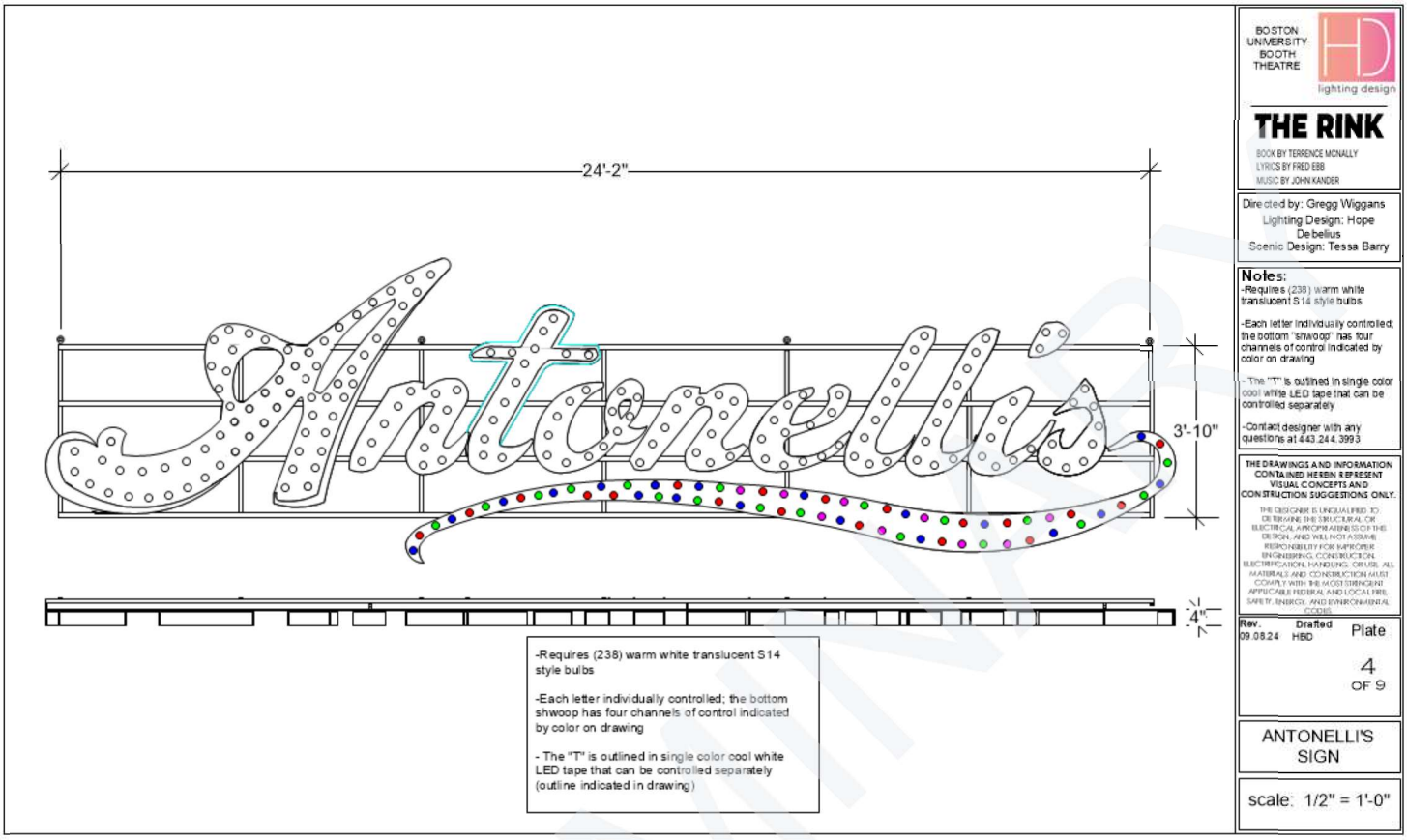

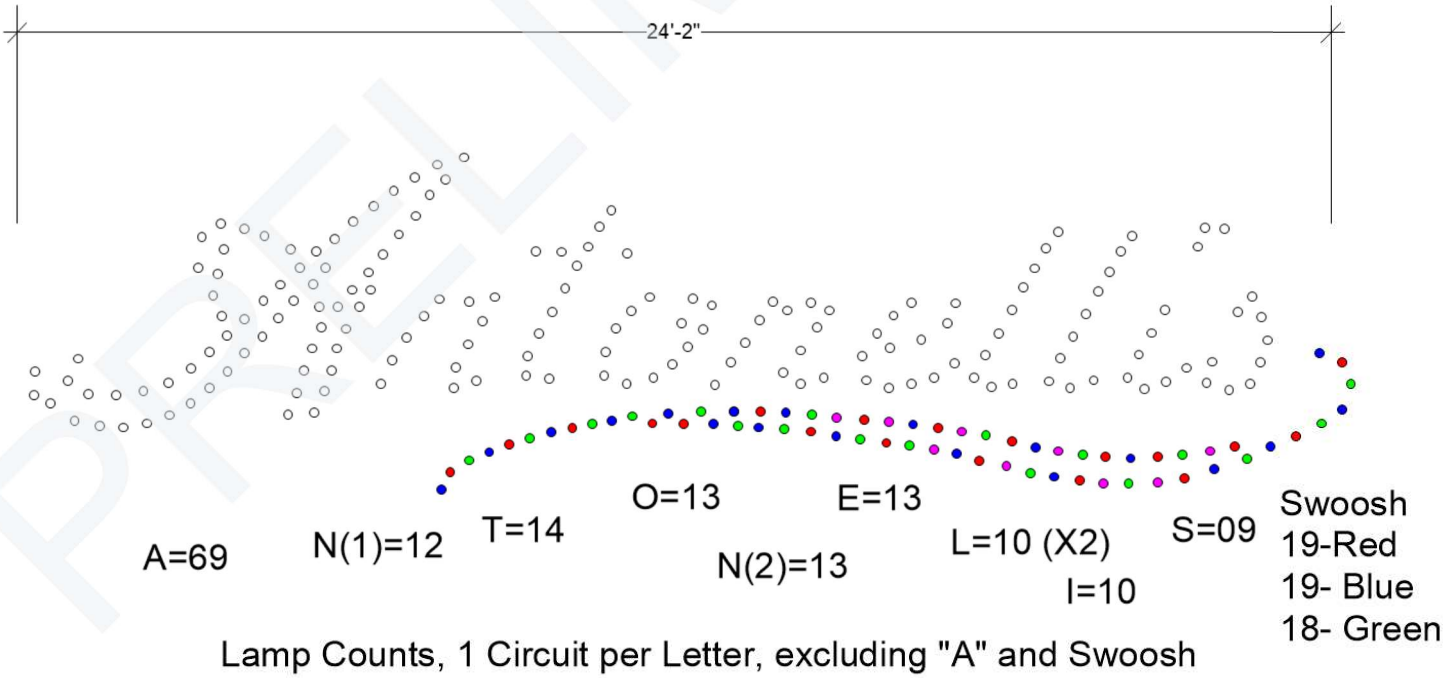

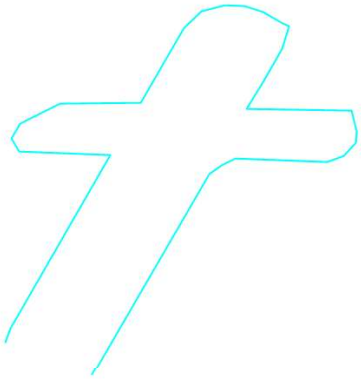

11' total
Tape outlines
T, inset to rearedge
of Letter

Component Costout

Option 1: Globe Lights&Led's

Item	Quantity	Cost (x1)	Cost (Total)	Link
CW LED Tape	1	$18.99	$18.99	LINK
DMX Decoder*	1	$22.29	$22.29	LINK
DMX 3-5 Convert*	1	$7.50	$7.50	LINK
12V Power Supply (10A)*	1	$24.41	$24.41	LINK
String light- Candelbra base(x25)*	15	$15.99	$239.85	LINK
Globe Bulb- candelbra base Clear,WW*	238	$0.44	$104.72	LINK
Power input	13	$15.59	$202.67	LINK
13 circuits dim, 1 non dim	**Practical Total:**		$620.43	

Practical 8: Central Truss

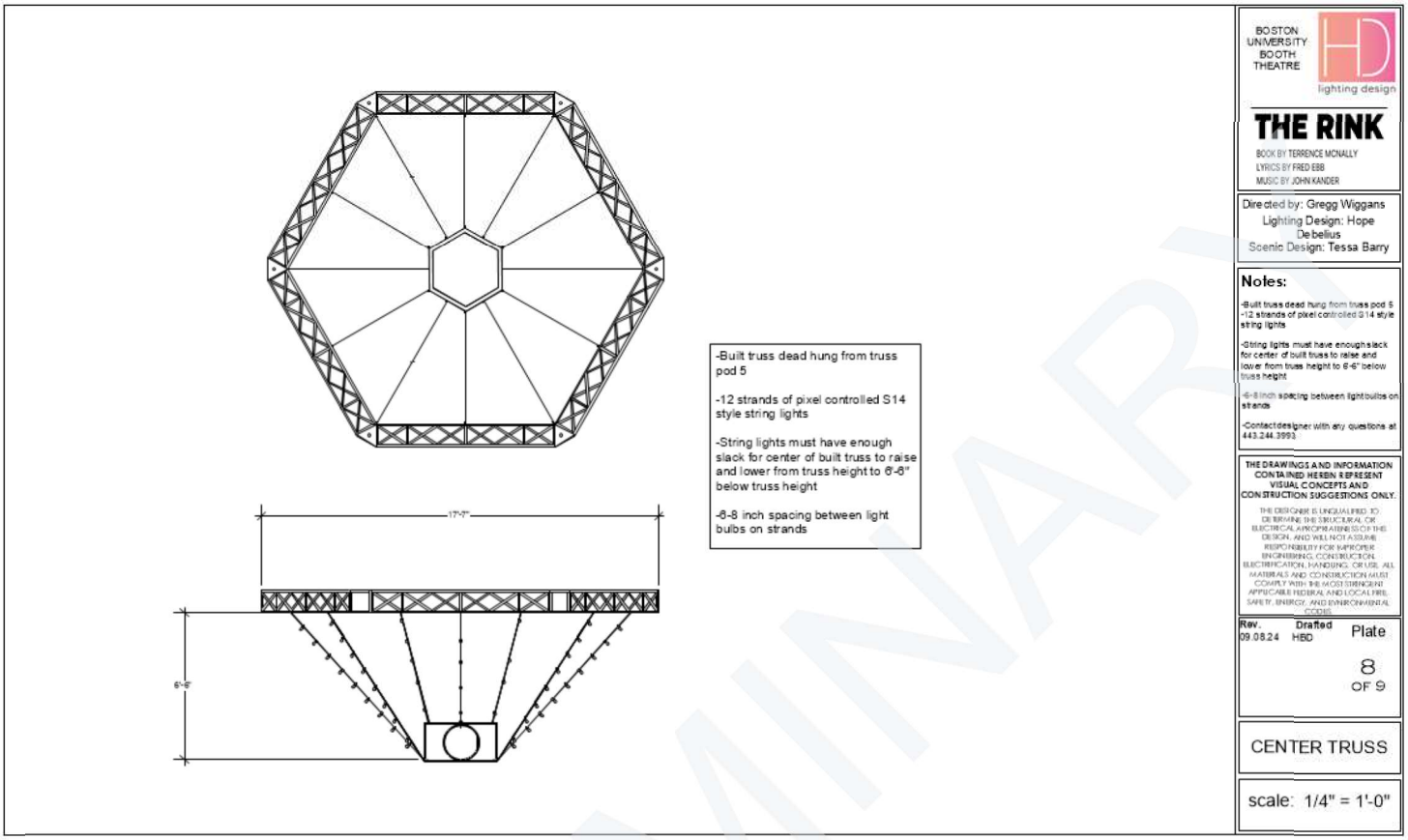

String Light Detail- 2 Channel Control Example

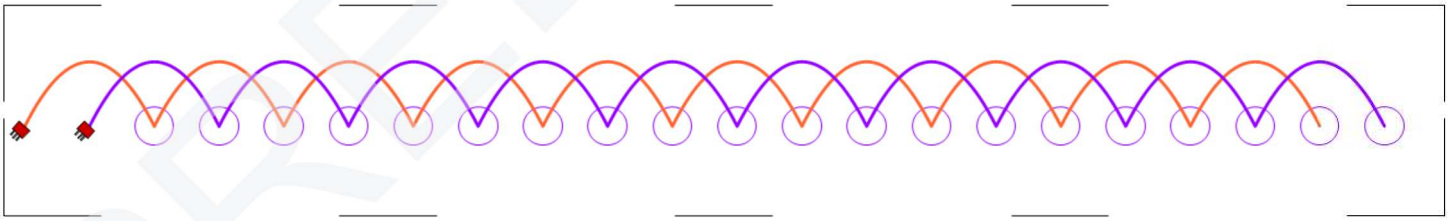

Component Costout

Option 1: Pixel Multi Control

Item	Quantity	Cost (x1)	Cost (Total)	Link
Pixel Controller--PI (STOCK)	1	$0.00	$0.00	LINK
Power Injection	1	$30.00	$30.00	LINK
12V Power Supply (30A)*	1	$39.00	$39.00	LINK
S14 Pixel Lights	12	$59.99	$719.88	LINK
	Practical Total:		$788.88	

Option 2: Single Control

Item	Quantity	Cost (x1)	Cost (Total)	Link
String lights, E26*	180	$2.09	$376.20	LINK
Light string E26 base*	12	$24.32	$291.84	LINK
Stagepin Connector (MALE) *	12	$6.80	$81.60	LINK
			$0.00	LINK
1 Channel Control per strand, 4.5A per strand	**Practical Total:**		$749.64	

Option 3: 2 Channel per Strand Control

Item	Quantity	Cost (x1)	Cost (Total)	Link
String lights, E26*	240	$2.09	$501.60	LINK
Light string E26 base	24	$21.99	$527.76	LINK
Stagepin Connector (MALE) *	24	$6.80	$163.20	LINK
			$0.00	LINK
2 Channel Control per strand, 3A per channel	**Practical Total:**		$1,192.56	

Practical 9: I-Beam Inset Lights

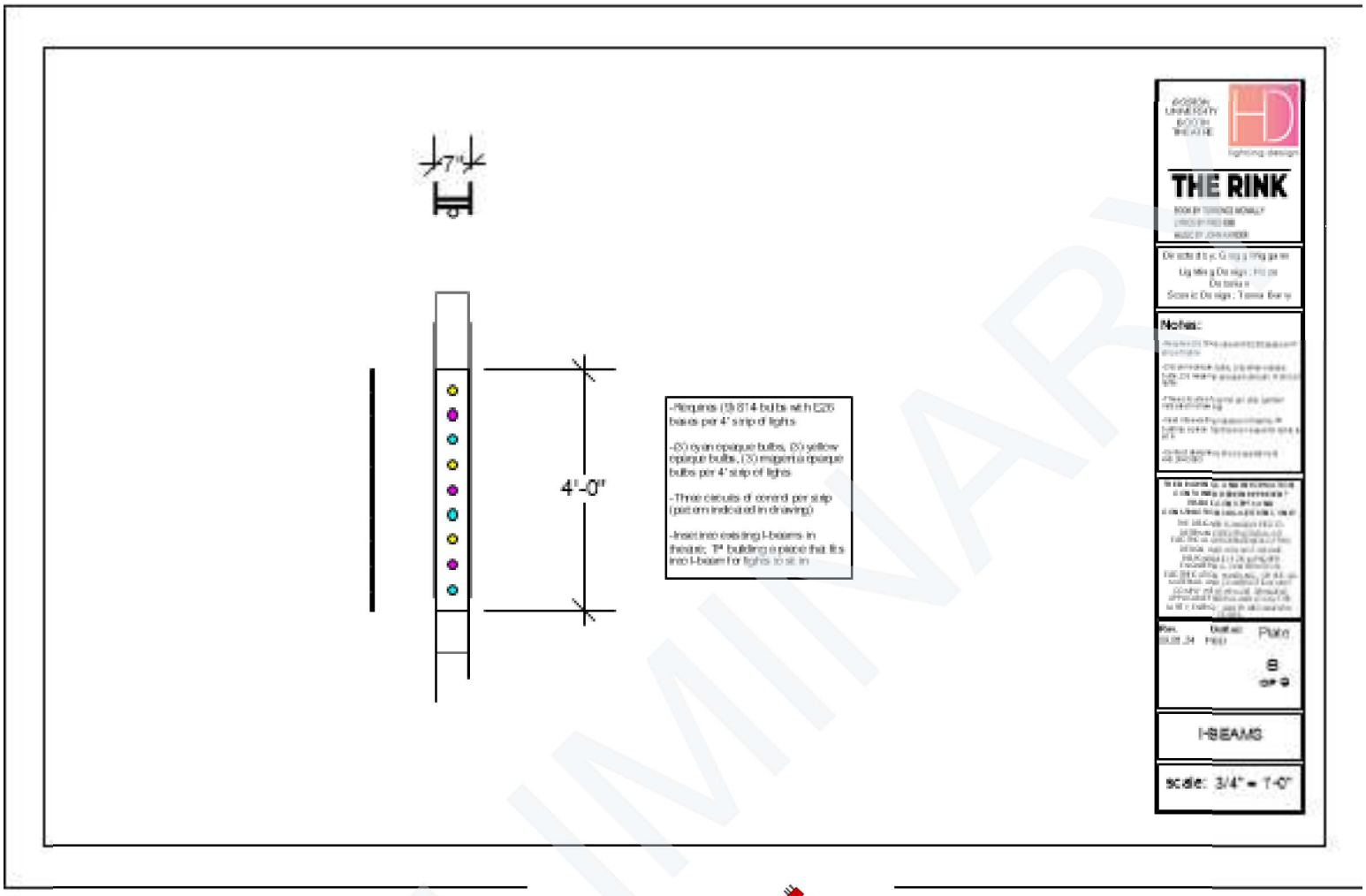

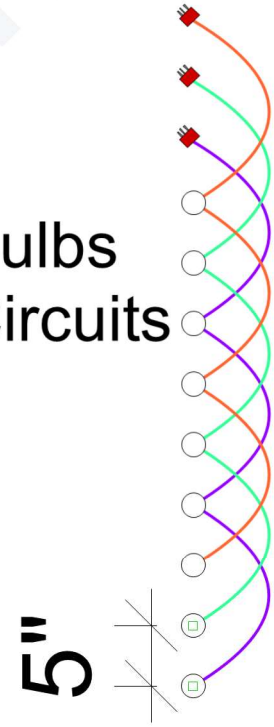

Component Costout

Option 1: Tri Channel I-Beams

Item	Quantity	Cost (x1)	Cost (Total)	Link
Light string E26 base	20	$24.32	$486.40	LINK
S-14 Bulb, E26 base--CYAN*	30	$2.05	$61.50	LINK
S-14 Bulb, E26 base--MAGENTA*	30	$2.05	$61.50	LINK
S-14 Bulb, E26 base--YELLOW*	30	$2.05	$61.50	LINK
Stagepin Connector (MALE) *	30	$6.80	$204.00	LINK
Colors need to be confirmed with the design team	**Practical Total:**		$874.90	

Practical 10: Rink Outline

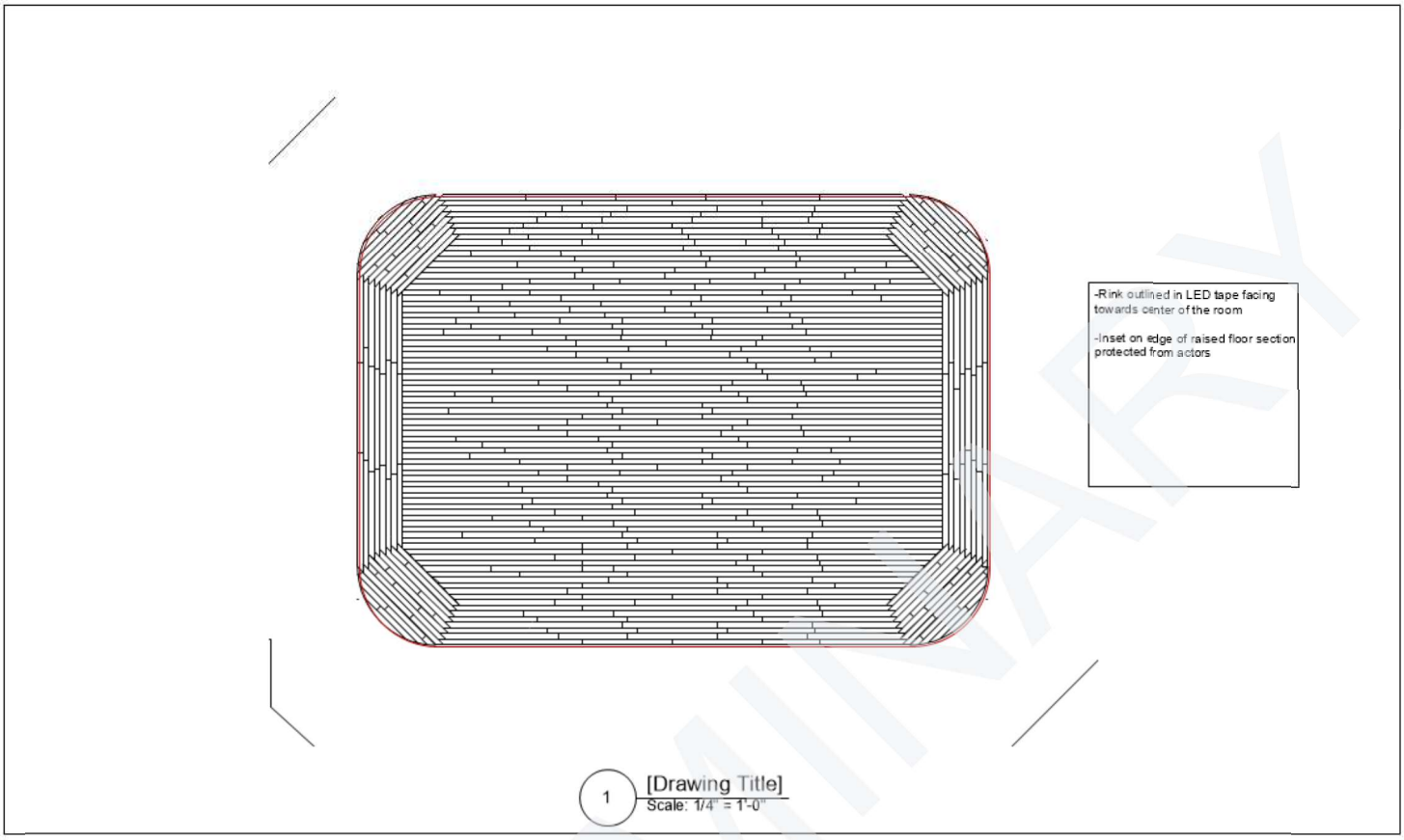

x5 16' 4.8", x1 8' Tape sections Single Channel control via overlapping address

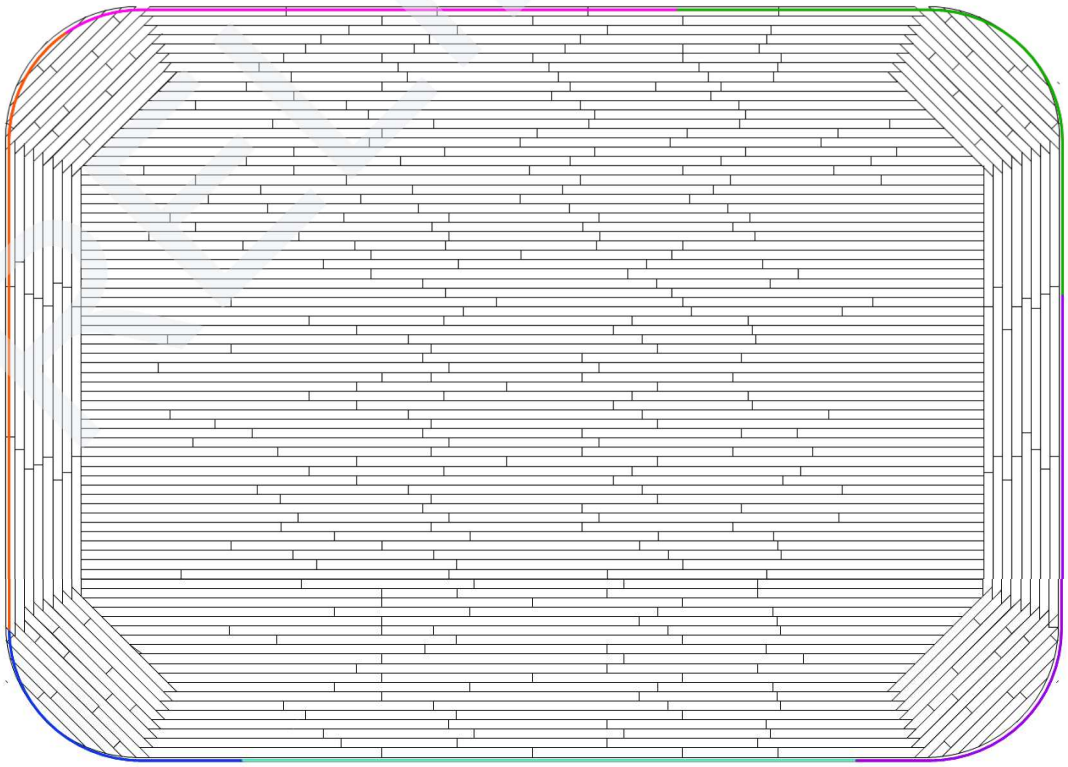

Component Costout

Option 1: RGBWw Tape outline w/ diffuser

Item	Quantity	Cost (x1)	Cost (Total)	Link
LED Tape RGBWarm White	6	$32.99	$197.94	LINK
12V Power Supply (50A)*	1	$39.41	$39.41	LINK
DMX Decoder*	6	$22.29	$133.74	LINK
DMX 3-5 Convert*	1	$7.50	$7.50	LINK
Cabling (5 wire) #	1	$9.99	$9.99	LINK
Wago (#)	1	$42.95	$42.95	LINK
Heatshrink (#)	1	$28.99	$28.99	LINK
Tape Diffuser	6	$19.99	$119.94	LINK
49A @ 12V,	**Practical Total:**		$580.46	

Option 2: Pixel Tape outline w/ diffuser

Item	Quantity	Cost (x1)	Cost (Total)	Link
Pixel Tape	6	$25.99	$155.94	LINK
12V Power Supply (50A)*	1	$39.41	$39.41	LINK
Pixel Controller (STOCK)	1	$0.00	$0.00	LINK
Power Injection	1	$30.00	$30.00	LINK
Cabling (2 wire) #	1	$9.99	$9.99	LINK
Tape Diffuser	6	$19.99	$119.94	LINK
Heatshrink (#)	1	$28.99	$28.99	LINK
			$0.00	LINK
~45A @ 12V	**Practical Total:**		$384.27	

Scenic Notes-

- All Light Boxes will need to be painted white to maximize effectivity
- Lightbox depth can be discussed as part of build
- Tape for Antonelli's sign outline is specced as .40 in wide

Time Estimates- Install & Testing

Prep time includes testing, pre-assembly, and other preinstallation tasks that do not necessitate the set piece being ready for installation
Install includes all tasks that are part of physically mounting, securing, and testing the pieces within their homes for the performance
QC includes all necessary steps to test the units post-install in the theatre, excluding tasks such as cable drops to positions, console setup, and/or any task normally performed by electricians while hanging a rig

All times listed are estimates and Best Case Scenario, more accurate time estimates can be provided once projects are more finalized and further drafting is completed

Luna Bar Sign

	Prep	Install	QC
Time	2hrs	1.5hrs	.5 Hrs
Crew	2 Crew	2 Crew	3 Crew

Red Devil Sign

	Prep	Install	QC
Time	2hrs	2.5hrs	.5 Hrs
Crew	2 Crew	3-4 Crew	3 Crew

Sun/Studio 54 Entrance Sign

	Prep	Install	QC
Time	2hrs	3hrs	.5 Hrs
Crew	3 Crew	3-4 Crew	3 Crew

Skate Lightbox

	Prep	Install	QC
Time	1hrs	1hrs	.5 Hrs
Crew	2 Crew	2 Crew	3 Crew

Skater Directions Sign

	Prep	Install	QC
Time	2hrs	2.5hrs	.5 Hrs
Crew	2 Crew	3-4 Crew	3 Crew

Arrow Sign

	Prep	Install	QC
Time	1hrs	2hrs	.5 Hrs
Crew	2 Crew	2 Crew	3 Crew

Antonelli's Sign

	Prep	Install	QC
Time	4-6hrs	4-6hrs	1 Hrs
Crew	4 Crew	4 Crew	3 Crew

Central Truss

	Prep	Install	QC
Time	3hrs	2hrs	1 Hrs
Crew	4 Crew	2 Crew	3 Crew

I-Beam Inset Lights

	Prep	Install	QC
Time	2hrs	1.5hrs	.5 Hrs
Crew	4 Crew	2 Crew	3 Crew

Rink Outline

	Prep	Install	QC
Time	1hr	2hrs	.5 Hrs
Crew	2 Crew	3 Crew	3 Crew

MATERIALS PRICE OUT

DESIGNER: Hope Debelius **PE:** Val Zhao
Asst: Davin Martin **Asst:** Terry Ford

BUDGET:	**2,000.00**
SPENT:	**$1,892.62**
OVER/UNDER:	**$107.38**
Percent Available:	**5.37%**

PROJECT	ITEM	DESCRIPTION	QTY.	VENDOR	UNIT COST	TOTAL COST	
			Luna Sign				Note-
RNK					$0.00	$0.00	
RNK					$0.00	$0.00	
RNK					$0.00	$0.00	
RNK					$0.00	$0.00	
RNK					$0.00	$0.00	
RNK					$0.00	$0.00	
			"Red" Devil Sign				Note-
RNK	Red Neon Tape	Neon LED Tape-red	1	Amazon	$15.99	$15.99	Line 3- 5500343964
RNK	Power Switch	Rocker Switch set	1	Amazon	$6.99	$6.99	Line 3- 5500349042
RNK	Red Neon Tape	Neon LED Tape-red	1	Amazon	$13.39	$13.39	Line 10- 5500349042
RNK					$0.00	$0.00	
RNK					$0.00	$0.00	
RNK					$0.00	$0.00	
			Sun/Studio 54 Sign				Note-
RNK	Poiwer Supply (24V)	24V 15A Power Supply	1	Amazon	$28.00	$28.00	Line 12- 5500349042
RNK	RGB NEon	RGB LED tape neon	2	Amazon	$71.99	$143.98	Line 14- 5500349042
RNK	4 wire sleeved	4wire 18AWG sleeved cable(50')	1	Amazon	$24.79	$24.79	Line 15-5500349042
RNK	4 wire sleeved	4wire 18AWG sleeved cable(150')	1	Amazon	$60.78	$60.78	Line 17-5500349042
RNK					$0.00	$0.00	
RNK					$0.00	$0.00	
			"Rent-A-Skate" Sign				Note-
RNK					$0.00	$0.00	
RNK					$0.00	$0.00	
RNK					$0.00	$0.00	
RNK					$0.00	$0.00	
RNK					$0.00	$0.00	
RNK					$0.00	$0.00	
			Skater Directions Sign				Note-
RNK	WW COB Tape	COB LED Tape-WW	1	Amazon	$18.99	$18.99	Line 1- 5500343964
RNK	WW COB Tape	COB LED Tape-WW	4	Amazon	$16.10	$64.40	Line 8- 5500349042
RNK					$0.00	$0.00	
RNK					$0.00	$0.00	
RNK					$0.00	$0.00	
RNK					$0.00	$0.00	
			Arrow Sign				Note-
RNK	Red E-14 LB	Lightbulb	1	Hometown Evolution	$19.95	$19.95	Line 3- #057272
RNK	Red E-14 LB	Lightbulb	1	Hometown Evolution	$19.95	$19.95	Line 3- #057593
RNK					$0.00	$0.00	
RNK					$0.00	$0.00	
RNK					$0.00	$0.00	
RNK					$0.00	$0.00	
			Antonelli's Sign				Note-
RNK	WW E-14 LB	Lightbulb	10	Hometown Evolution	$15.95	$159.50	Line 4- #057593
RNK	white Neon Tape	Neon LED Tape-Cool white	1	Amazon	$14.99	$14.99	Line 11- 5500349042
RNK					$0.00	$0.00	
RNK					$0.00	$0.00	
RNK					$0.00	$0.00	
RNK					$0.00	$0.00	

MATERIALS PRICE OUT

DESIGNER: Hope Debelius **PE:** Val Zhao
Asst: Davin Martin **Asst:** Terry Ford

BUDGET:	**2,000.00**
SPENT:	**$1,892.62**
OVER/UNDER:	**$107.38**
Percent Available:	**5.37%**

PROJECT	ITEM	DESCRIPTION	QTY.	VENDOR	UNIT COST	TOTAL COST	
			Central Truss				Note-
RNK	String Lights	Govee Ws2811 pixel lights	1	Amazon	$79.99	$79.99	Line 1- : 5500344102
RNK	Fist Grip	HG 3/16-1/4"	12	Rigging Warehouse	$2.35	$28.20	Line 1- Inv5504087.pdf
RNK	Tie Line	COATED BK #8 1/4X100'	1	Rigging Warehouse	$16.35	$16.35	Line 2- Inv5504087.pdf
RNK	Cotton Cord	#10X100' WHITE	1	Rigging Warehouse	$19.90	$19.90	Line 3- Inv5504087.pdf
RNK	~~X-Connect Pigtails~~	~~5 Pairs, 3 pin pigtails~~	~~6~~	Amazon	~~$7.99~~	$0.00	Line 1-5500349042 **RETURNED**
RNK	String Lights	Govee Ws2811 pixel lights	5	Amazon	$99.99	$499.95	Line 9- 5500349042
RNK	Power Supply(12V)	12V 30A	2	Amazon	$28.41	$56.82	Line 6- 5500349042
RNK	X-Connect Cables	6.5' each	12	Amazon	$15.99	$191.88	Line 19- 5500349042
RNK	X-Connect Tee	Power Injection 2	3	Amazon	$15.89	$47.67	Line 20- 5500349042
RNK	X-Connect Pigtails	10 Pairs, 3 pin pigtails	2	Amazon	$23.99	$47.98	LIne 1- PR412796
RNK	Power supply(12V)	12V @50A out	1	Amazon	$39.41	$39.41	Line 1- 5500357228
RNK					$0.00	$0.00	
RNK					$0.00	$0.00	
			I-Beam Inset Lights				Note-
RNK	Yellow E-14 LB	Lightbulb	1	Hometown Evolution	$19.95	$19.95	Line 2- #057272
RNK	Blue E-14 LB	Lightbulb	1	Hometown Evolution	$19.95	$19.95	Line 1- #057272
RNK	Yellow E-14 LB	Lightbulb	1	Hometown Evolution	$19.95	$19.95	Line 2- #057593
RNK	Blue E-14 LB	Lightbulb	1	Hometown Evolution	$19.95	$19.95	Line 1- #057593
RNK					$0.00	$0.00	
RNK					$0.00	$0.00	
			Rink Outline				Note-
RNK	RGB Pixel Tape	Ws2811 pixels RGB	1	Amazon	$24.99	$24.99	Line 1-5500346532
			General Supplies				Note-
RNK	Glue Sticks	4" clear	1	Amazon	$22.99	$22.99	Line 1- 5500353017
RNK	Wago 3 Slot	Wago 221-413	1	Amazon	$29.99	$29.99	Line 2- 5500349042
RNK	R&B 2 wire	22awg Hot and Neutral wire	1	Amazon	$8.46	$8.46	Line 4- 5500349042
RNK	Wago 5 Slot	Wago 221-415	2	Amazon	$16.32	$32.64	Line 5- 5500349042
RNK	Zip ties	400cnt variety	1	Amazon	$5.99	$5.99	Line 7- 5500349042
RNK	V+RGB wire	22awg 4 wire	1	Amazon	$8.46	$8.46	Line 13- 5500349042
RNK	3m Double stick	VHB	2	Amazon	$16.99	$33.98	Line 16- 5500349042
RNK	Solder seal	200pc solder seal set	3	Amazon	$8.49	$25.47	Line 18-5500349042
RNK					$0.00	$0.00	
RNK					$0.00	$0.00	
RNK					$0.00	$0.00	

As of 12/18/2024--11:22

Noah Wrafter, Set Electrics Coordinator
(845) 554-2742 | nwrafter@bu.edu

	Monday	Tuesday	Wednesday	Thursday	Friday	Saturday	Sunday	
Date	9/2/2024	9/3/2024	9/4/2024	9/5/2024	9/6/2024	9/7/2024	9/8/2024	Weekly Total
Task	N/A	N/A	N/A	N/A	N/A	R&D	R&D	4
Hour Count	0	0	0	0	0	2	2	
Date	9/9/2024	9/10/2024	9/11/2024	9/12/2024	9/13/2024	9/14/2024	9/15/2024	Weekly Total
Task	R&D	R&D	R&D	R&D	R&D	R&D	R&D	43
Hour Count	4	4	6	7	4	6	12	
Date	9/16/2024	9/17/2024	9/18/2024	9/19/2024	9/20/2024	9/21/2024	9/22/2024	Weekly Total
Task	Budget&Spec	Budget&Spec	Budget&Spec	Budget&Spec	Budget&Spec	Budget&Spec	Budget&Spec	34
Hour Count	3	1	2	2	4	10	12	
Date	9/23/2024	9/24/2024	9/25/2024	9/26/2024	9/27/2024	9/28/2024	9/29/2024	Weekly Total
Task	Budget&Spec	Budget&Spec	Drafting	Drafting	Drafting	Drafting	Drafting	33
Hour Count	4	2	1	4	8	6	8	
Date	9/30/2024	10/1/2024	10/2/2024	10/3/2024	10/4/2024	10/5/2024	10/6/2024	Weekly Total
Task	Drafting	Drafting	Drafting	Drafting	Drafting	Drafting	Drafting	38
Hour Count	3	3	6	4	4	8	10	
Date	10/7/2024	10/8/2024	10/9/2024	10/10/2024	10/11/2024	10/12/2024	10/13/2024	Weekly Total
Task	Drafting	Drafting	Drafting	Drafting	Drafting	Build Prep	Build Prep	41
Hour Count	6	4	5	6	6	8	6	
Date	10/14/2024	10/15/2024	10/16/2024	10/17/2024	10/18/2024	10/19/2024	10/20/2024	Weekly Total
Task	Build Prep	Build Prep	Build Prep	Build Prep	Build	Build	Build	51
Hour Count	3	4	6	4	8	14	12	
Date	10/21/2024	10/22/2024	10/23/2024	10/24/2024	10/25/2024	10/26/2024	10/27/2024	Weekly Total
Task	Build Prep	Build Prep	Build Prep	Build Prep	Build Prep	Build Prep	Build Prep	32
Hour Count	3	4	6	4	5	4	6	
Date	10/28/2024	10/29/2024	10/30/2024	10/31/2024	11/1/2024	11/2/2024	11/3/2024	Weekly Total
Task	Build Prep	Build Prep	Build Prep	Build/Install	Build/Install	Build Prep	Build Prep	60
Hour Count	2	3	3	14	14	10	14	
Date	11/4/2024	11/5/2024	11/6/2024	11/7/2024	11/8/2024	11/9/2024	11/10/2024	Weekly Total
Task	Build/Install	Build/Install	Build/Install	Build/Install	Build/Install	Build/Install	Build/Install	64
Hour Count	8	12	14	6	4	8	12	
Date	11/11/2024	11/12/2024	11/13/2024	11/14/2024	11/15/2024	11/16/2024	11/17/2024	Weekly Total
Task	Build/Install	Build/Install	Build/Install	Build/Install	Build/Install	Build/Install	SKR/LB	57
Hour Count	8	9	7	8	11	14	0	
Date	11/18/2024	11/19/2024	11/20/2024	11/21/2024	11/22/2024	11/23/2024	11/24/2024	Weekly Total
Task	SKR/LB	SKR/LB	SKR/LB	SKR/LB	SKR/LB	SKR/LB	SKR/LB	0
Hour Count	0	0	0	0	0	0	0	
Date	11/25/2024	11/26/2024	11/27/2024	11/28/2024	11/29/2024	11/30/2024	12/1/2024	Weekly Total
Task	SKR/LB	Thanksgiving Break						0
Hour Count	0							
Date	12/2/2024	12/3/2024	12/4/2024	12/5/2024	12/6/2024	12/7/2024	12/8/2024	Weekly Total
Task	SKR/LB	SKR/LB	SKR/LB	SKR/LB	SKR/LB	SKR/LB	STRIKE	6
Hour Count	0	0	0	0	0	0	6	
Date	12/9/2024	12/10/2024	12/11/2024	12/12/2024	12/13/2024	12/14/2024	12/15/2024	Weekly Total
Task	STRIKE	STRIKE	STRIKE	STRIKE	N/A	N/A	N/A	17
Hour Count	4	6	4	3	0	0	0	
Approximate Total Hours: 480								

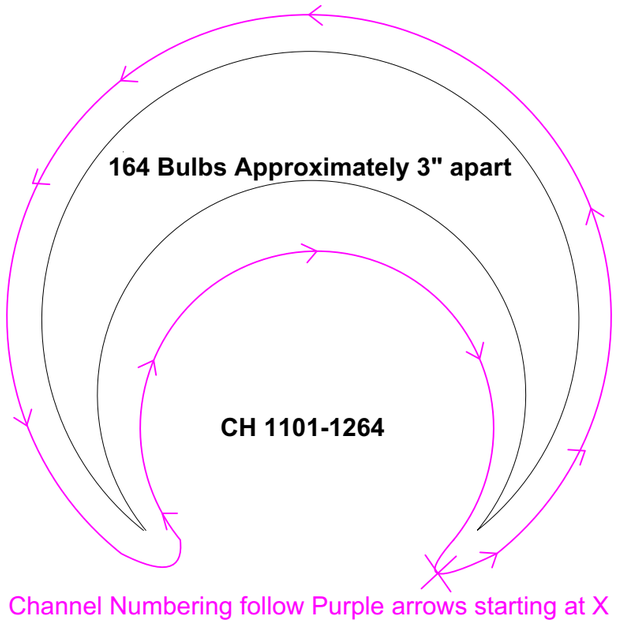

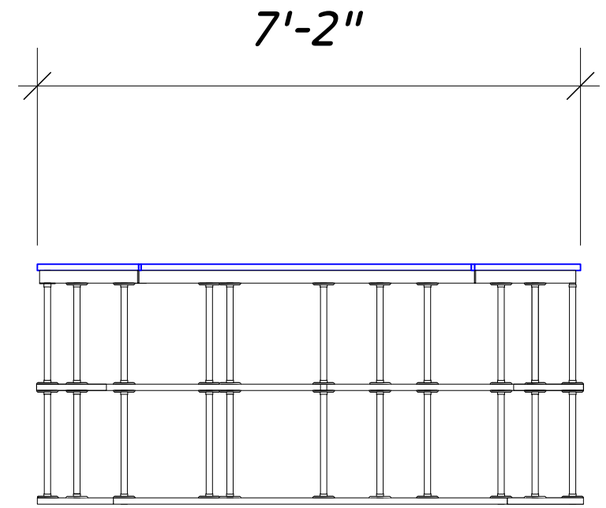

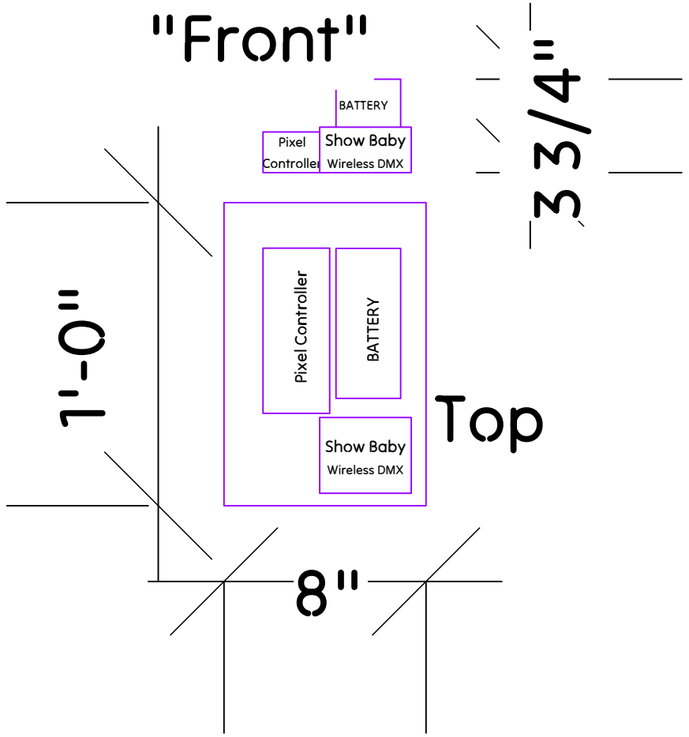

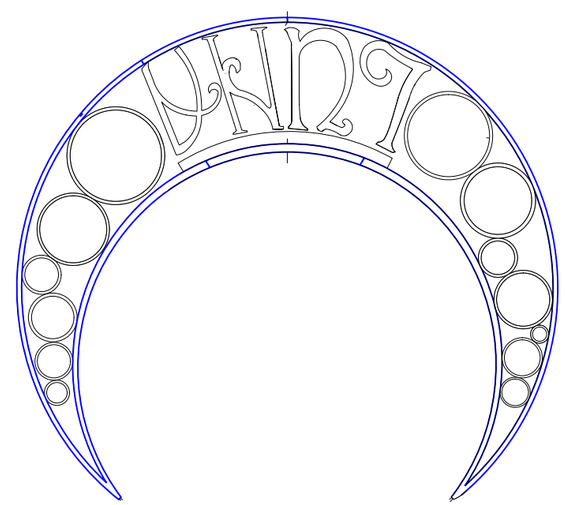

Contacts:

Lighting Designer: Hope Debilius

Assistant Lighting Designer: Davin Martin

Production Electrician: Val Zhao

Assistant Production Electrician: Terry Ford

Noah Wrafter
Practical Specialist
wrafterlx.com
nwrafter@bu.edu +1(845)554-2742

NWLX
Light for a Life of Entertainment

BU School Of Theatre

The Rink

Joan Edgar Booth Theatre
820 Commonwealth Avenue, Brookline MA, 02215

Luna Park Sign

Scale: Not Noted

Plate: Det-1

Drafted By: Noah Wrafter

4/24/2025

Pixel Controller is a Raspberry Pi Pico with RS485 Hat for DMX input
Battery uses Pink or Blue Terminal Connectors
Switch added in Neutral/ground line
Power runs to 5 Slot Wago connector
--One line runs too show baby reciever--See Ben for Barrel plug
--Second line runs too 12V to 5V adapter
---Other 2 are for power injection into pixels
------5V adapter connects directly to pi via MicroUSB
DMX cable links ShowBaby and Pixel Controller
Pixels plug directly into controller
Inbetween strand 2+3, and at end of string 4 power is injected with a T Cable

NOT DRAWN IN PLACE

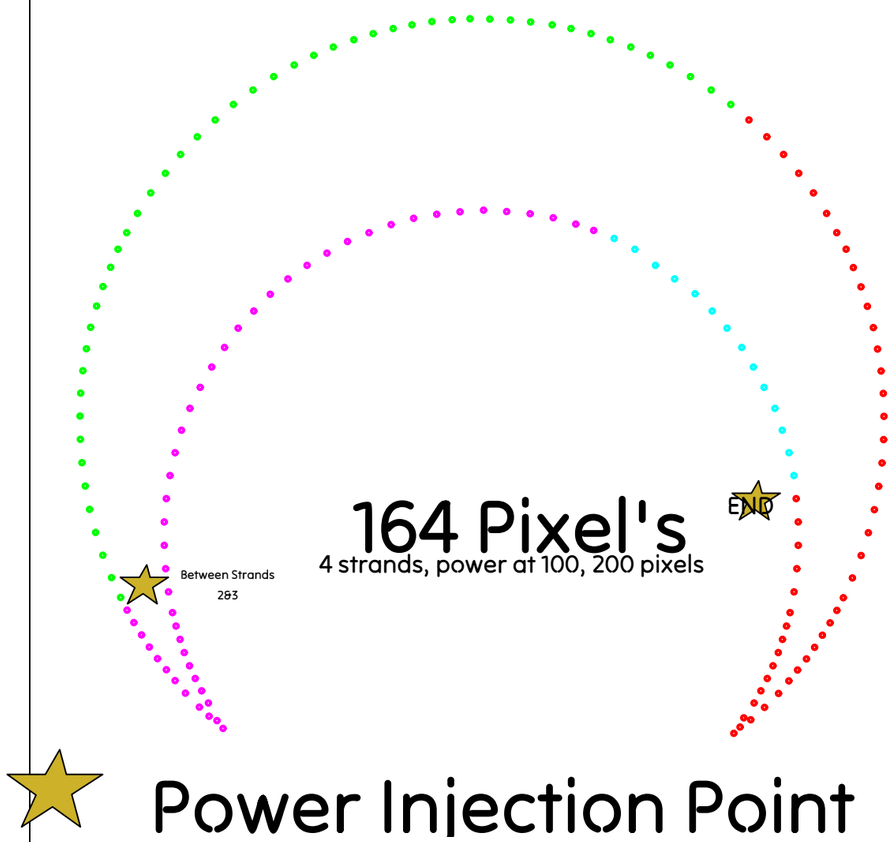

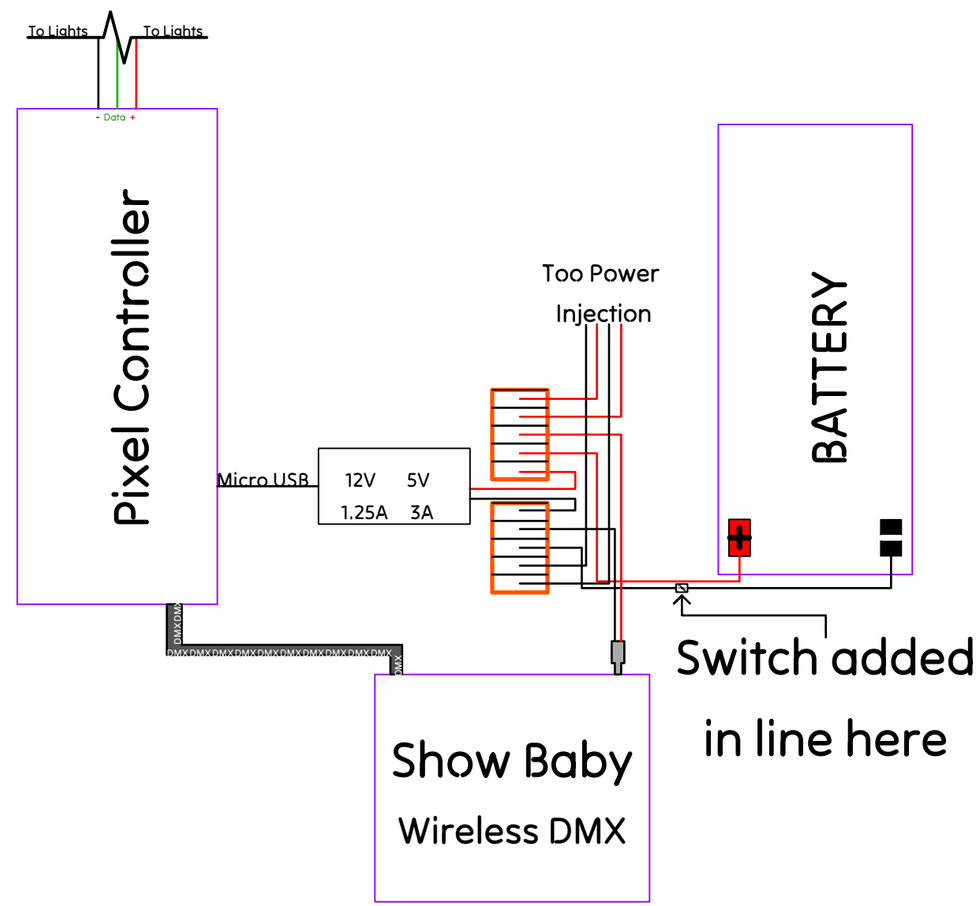

Contacts:
Lighting Designer: Hope Debilius
Assistant Lighting Designer: Davin Martin
Production Electrician: Val Zhao
Assistant Production Electrician: Terry Ford

Noah Wrafter
Practical Specialist
wrafterlx.com
nwrafter@bu.edu +1(845)554-2742
NWLX
Light for a Life of Entertainment

BU School Of Theatre
The Rink

Joan Edgar Booth Theatre
820 Commonwealth Avenue, Brookline MA, 02215

Luna Park Sign--Wiring

Scale: Not Noted

Drafted By:
Noah Wrafter

Plate: Det-1.1

11/3/2024

NOT TO SCALE

D
E
V
I
L

6' inner

12' Outers

18' total

22' w/ adjustments to CNC

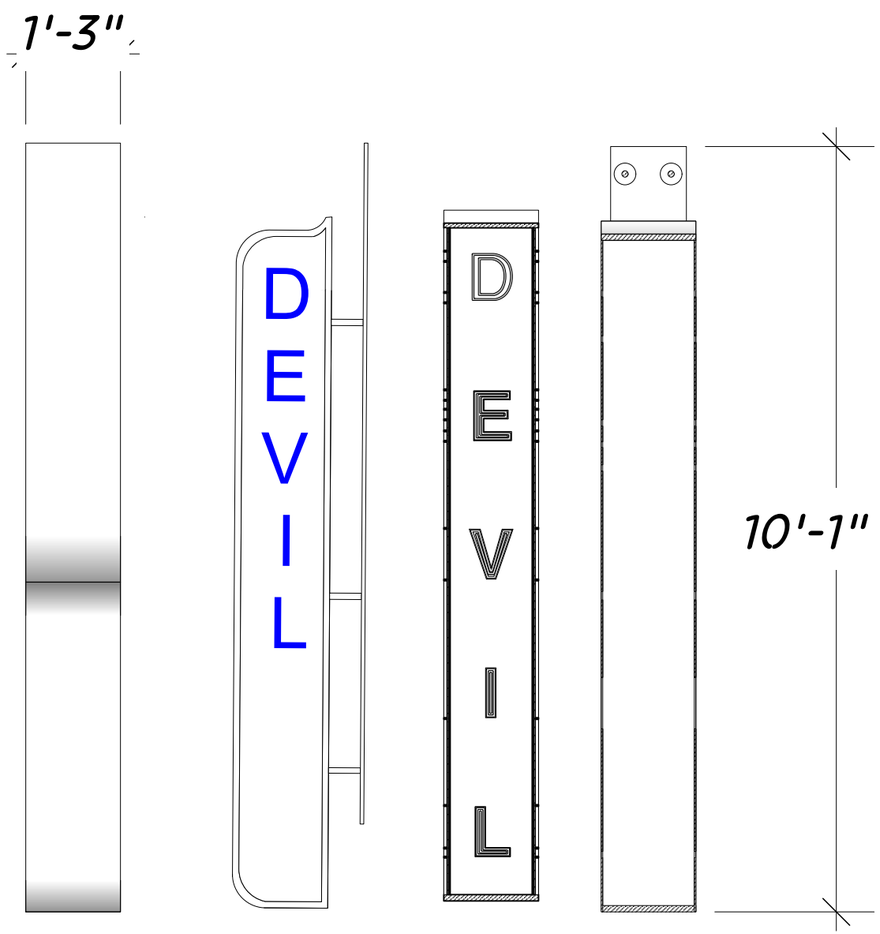

Letters are C741
Outline is C742

Contacts:

Lighting Designer: Hope Debilius

Assistant Lighting Designer: Davin Martin

Production Electrician: Val Zhao

Assistant Production Electrician: Terry Ford

Noah Wrafter
Practical Specialist
wrafterlx.com
nwrafter@bu.edu +1(845)554-2742

NWLX
Light for a Life of Entertainment

BU School Of Theatre

The Rink

Joan Edgar Booth Theatre
820 Commonwealth Avenue, Brookline MA, 02215

"Red" Devil Sign

Scale: 1:24

Plate: Det-2

Drafted By:
Noah Wrafter

11/3/2024

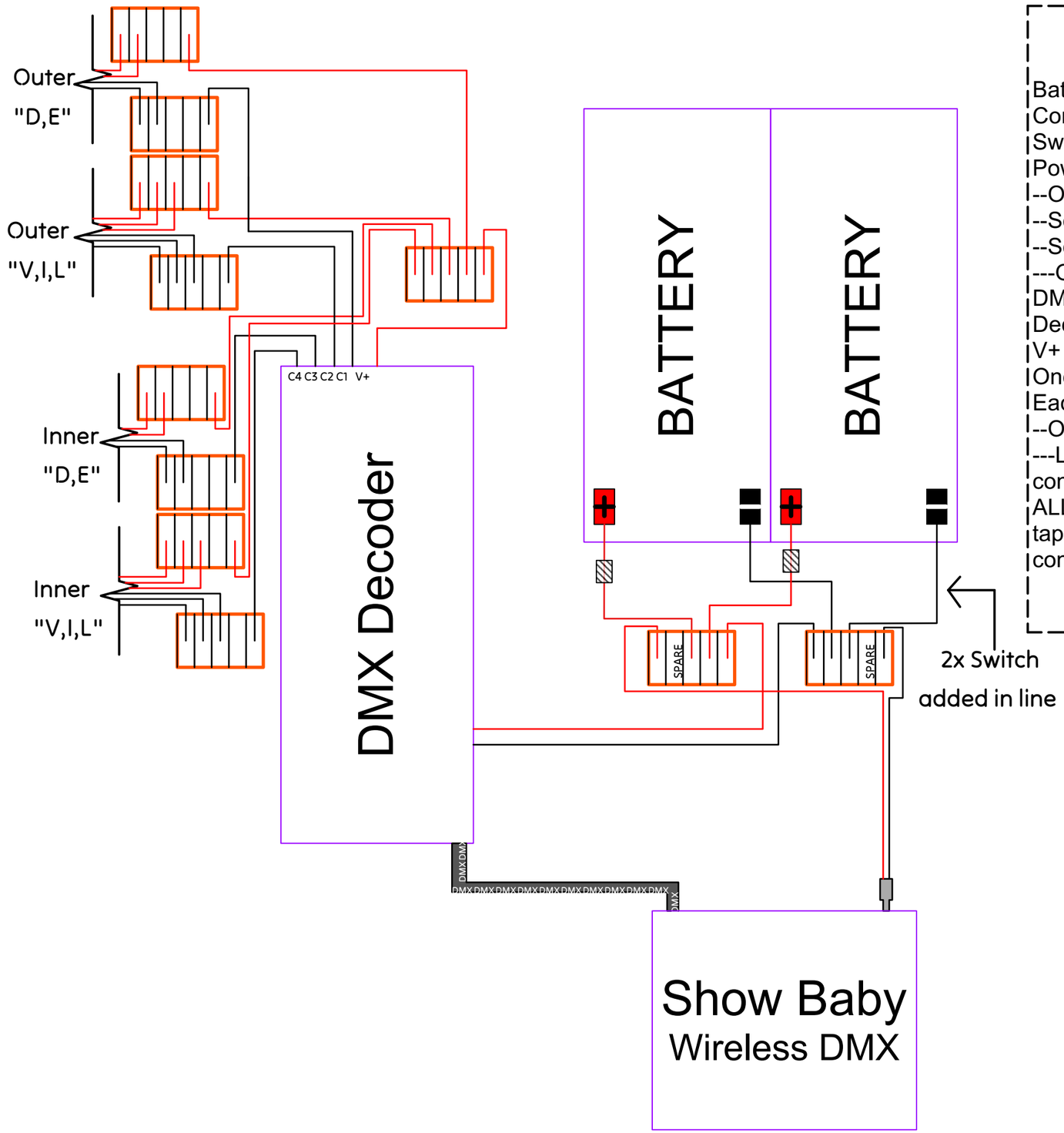

Battery uses Pink or Blue Terminal Connectors
Switch added in both Hot Lines line
Power runs to 5 Slot Wago connector each
--One line runs to show baby reciever
--See Ben for Barrel plug
--Second line runs too DMX Decoder
---One spare plug in each
DMX cable links ShowBaby and DMX Decoder
V+ out of the Decoder runs too a 5 Wago
One hot runs out with nuestral for Ch1-4
Each channel runs to a 5 Wago
--One line runs to each assigned letters
---Letters recieve 1 pair each for 2 Channel of control
ALL connectors should be soldered directly to tape or spliced with Heat Shrink Solder connectors

Contacts:

Lighting Designer: Hope Debilius
Assistant Lighting Designer: Davin Martin
Production Electrician: Val Zhao
Assistant Production Electrician: Terry Ford

Noah Wrafter
Practical Specialist
wrafterlx.com
nwrafter@bu.edu +1(845)554-2742

NWLX
Light for a Life of Entertainment

BU School Of Theatre

The Rink

Joan Edgar Booth Theatre
820 Commonwealth Avenue, Brookline MA, 02215

"Red" Devil Sign--Wiring

Scale: 1:1.6

Drafted By: Noah Wrafter

Plate: Det-2.1

11/3/2024

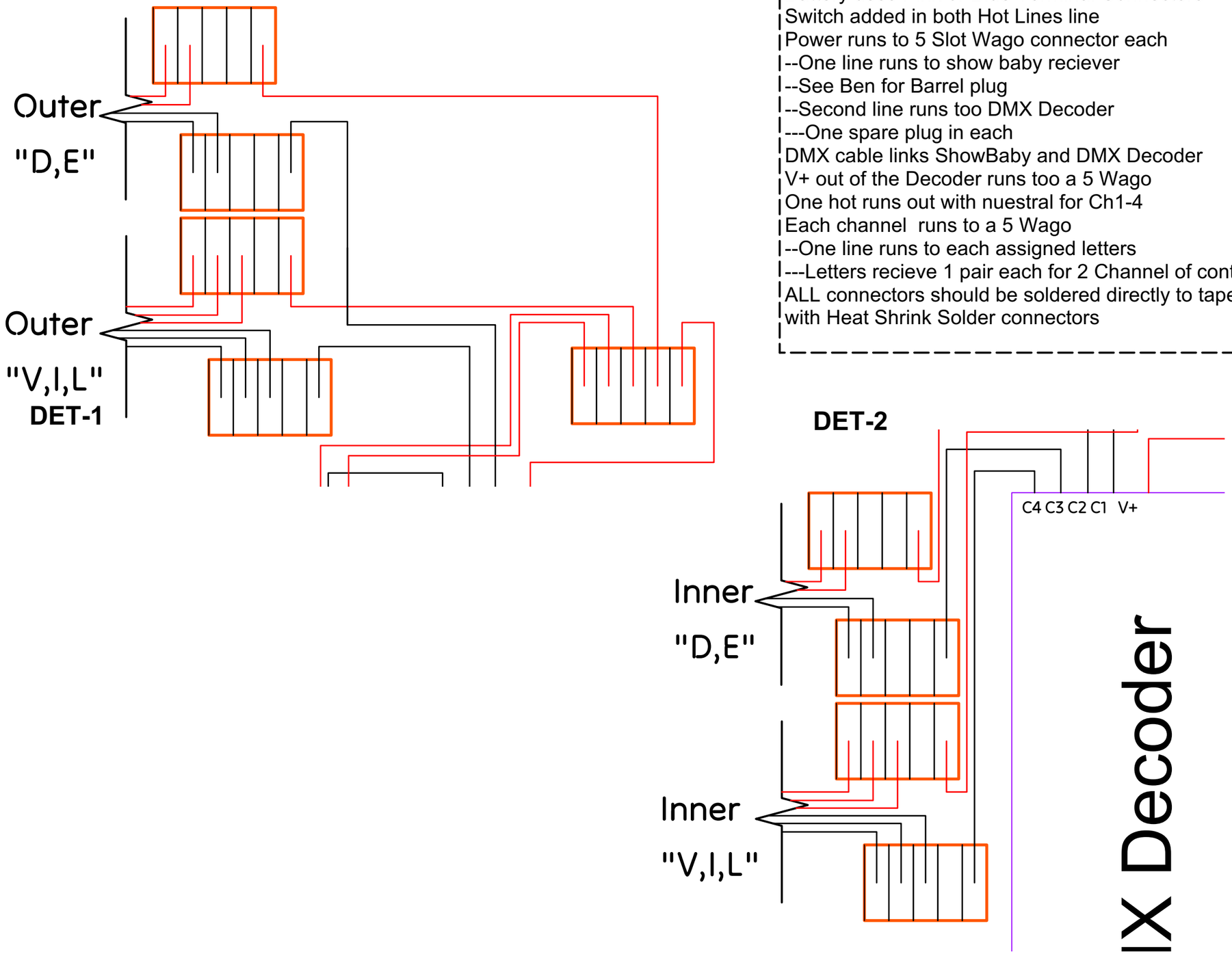

Battery uses Pink or Blue Terminal Connectors
Switch added in both Hot Lines line
Power runs to 5 Slot Wago connector each
--One line runs to show baby reciever
--See Ben for Barrel plug
--Second line runs too DMX Decoder
---One spare plug in each
DMX cable links ShowBaby and DMX Decoder
V+ out of the Decoder runs too a 5 Wago
One hot runs out with nuestral for Ch1-4
Each channel runs to a 5 Wago
--One line runs to each assigned letters
---Letters recieve 1 pair each for 2 Channel of control
ALL connectors should be soldered directly to tape or spliced with Heat Shrink Solder connectors

Contacts:

Lighting Designer: Hope Debilius
Assistant Lighting Designer: Davin Martin
Production Electrician: Val Zhao
Assistant Production Electrician: Terry Ford

Noah Wrafter
Practical Specialist
wrafterlx.com
nwrafter@bu.edu +1(845)554-2742

NWLX
Light for a Life of Entertainment

BU School Of Theatre

The Rink

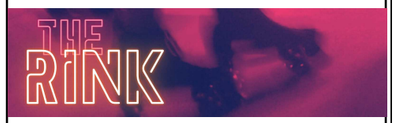

Joan Edgar Booth Theatre
820 Commonwealth Avenue, Brookline MA, 02215

"Red" Devil Sign--Wiring

Scale: 1:1

Drafted By: Noah Wrafter

Plate: Det-2.2

11/3/2024

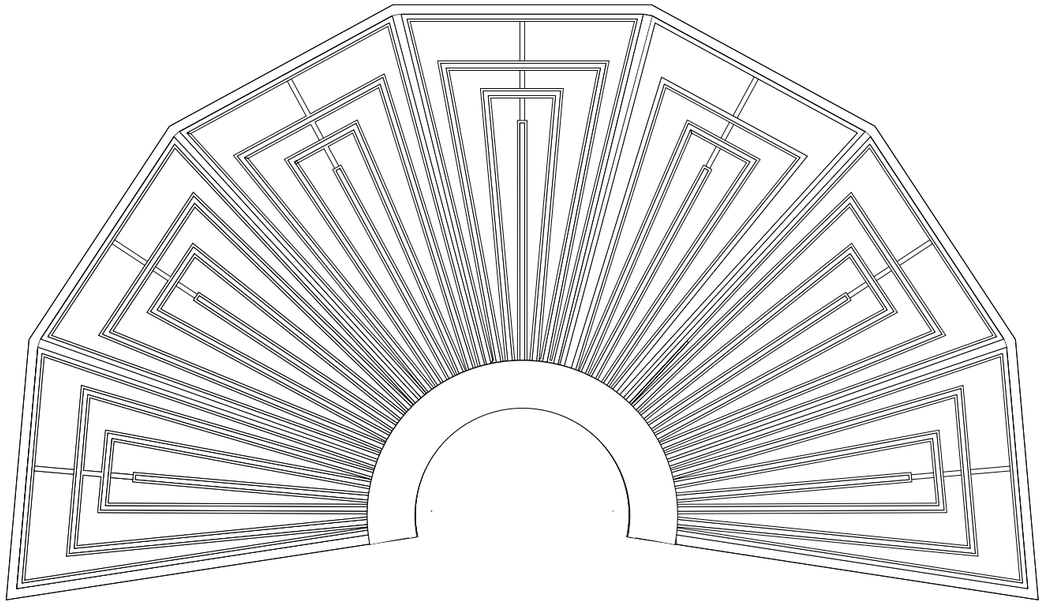

8'4" per

58'4" Total

~ 4A

Control Channel 731

156' 4"

6'8" per

46'8" Total

~3A

Control Channel 732

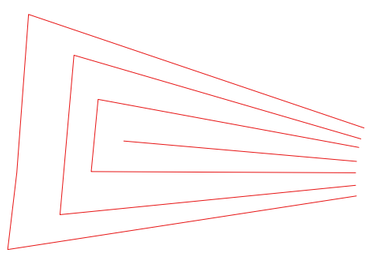

22'4"

x 7

Control Channel 733

5'4" per

37'4" Total

Control Channel 734

2'1" per

14'7" Total

Contacts:

Lighting Designer: Hope Debilius

Assistant Lighting Designer: Davin Martin

Production Electrician: Val Zhao

Assistant Production Electrician: Terry Ford

Noah Wrafter
Practical Specialist
wrafterlx.com
nwrafter@bu.edu +1(845)554-2742

NWLX
Light for a Life of Entertainment

BU School Of Theatre

The Rink

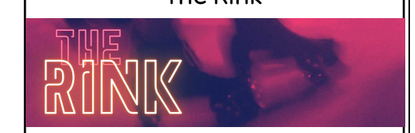

Joan Edgar Booth Theatre
820 Commonwealth Avenue, Brookline MA, 02215

Sun/Studio 54 Sign

Scale: 1:16

Drafted By:
Noah Wrafter

Plate: Det-3

11/3/2024

Mains power connects to
Power Supply
2 Low Voltage Power Lines
run direct to Decoders
3rd line Runs too 3 Wago
-- 2 Lines from Wago runs
to final 2 decoders
DMX runs into 3-5
Converter and then chains
through 4 Decoders
Each decoder has 2 cables
leaving running to Sign
below
--V+, C1-3 per cable

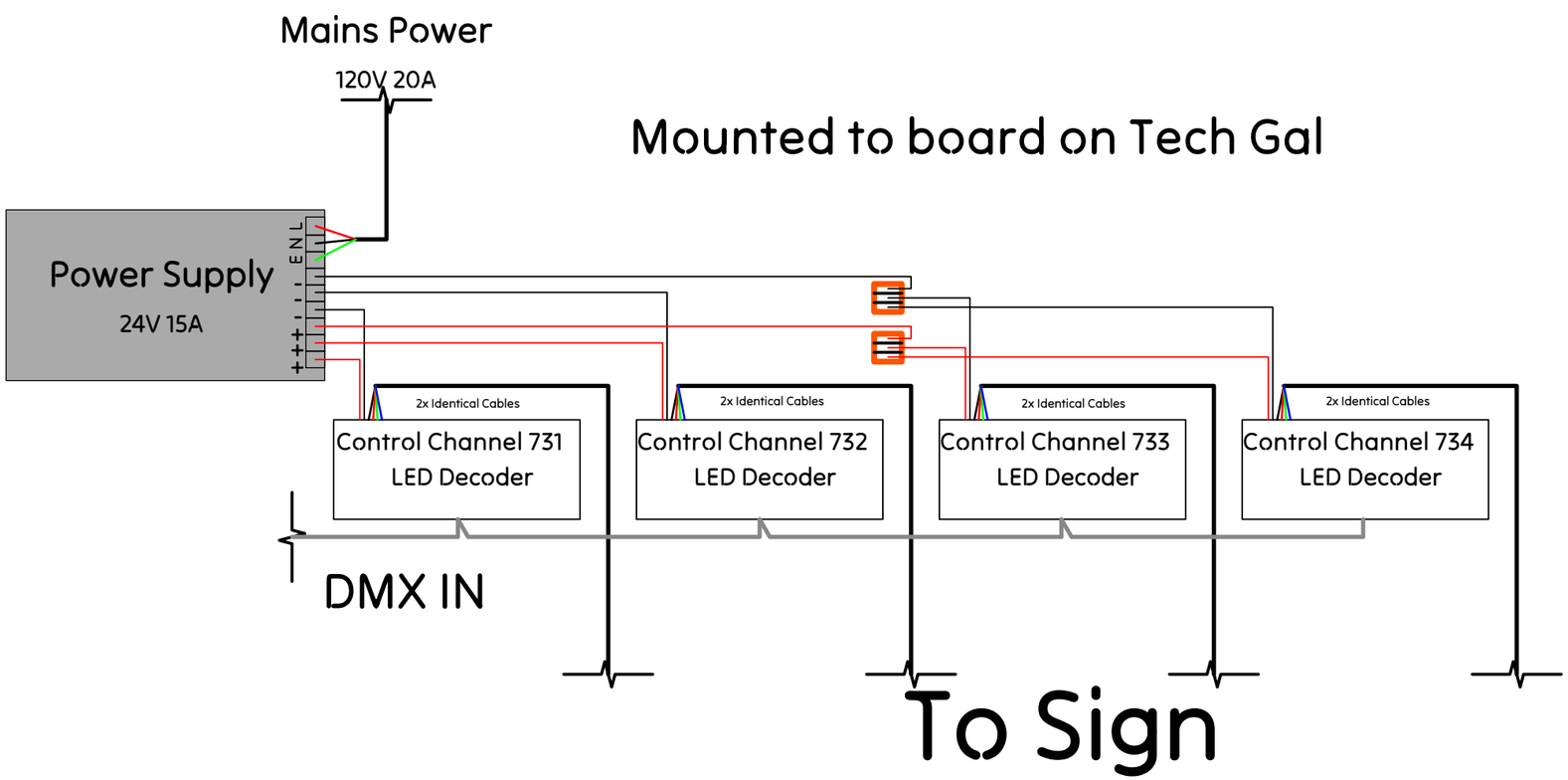

From Tech Gal

Aproximately 20' per run

Aproximately 20' per run

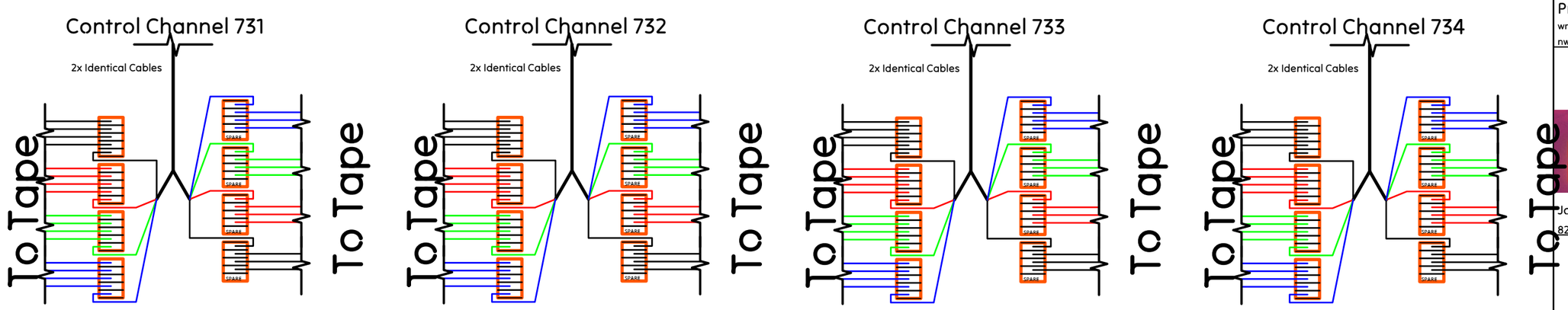

Contacts:
Lighting Designer: Hope Debilius
Assistant Lighting Designer: Davin Martin
Production Electrician: Val Zhao
Assistant Production Electrician: Terry Ford

Noah Wrafter
Practical Specialist
wrafterlx.com
nwrafter@bu.edu +1(845)554-2742
NWLX
Light for a Life of Entertainment

BU School Of Theatre

The Rink

Joan Edgar Booth Theatre
820 Commonwealth Avenue, Brookline MA, 02215

Sun/Studio 54 Sign--Wiring

Scale: Not Noted

Drafted By:
Noah Wrafter

Plate: Det-3.1

11/3/2024

EXAMPLE

FROM TECH GAL
Each pair of cables splits to a 5 Wago (8 total per decoder
One Cable will have all 4 Wago slots Full
Second cable will have one spare
Each decoder is wired identically to control 7 strands
ALL connectors should be soldered directly to tape or spliced with Heat Shrink Solder connectors

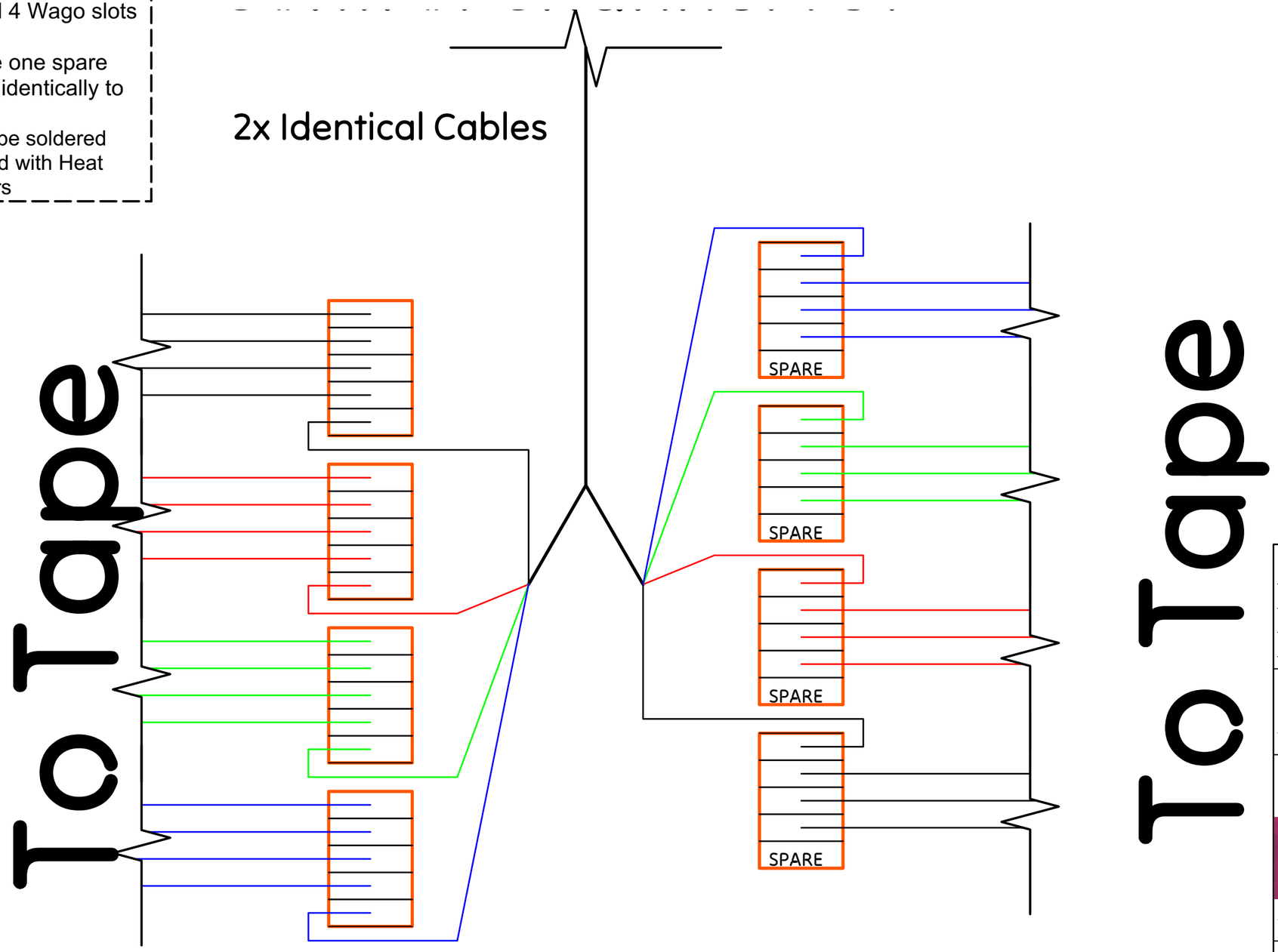

Contacts:

Lighting Designer: Hope Debilius
Assistant Lighting Designer: Davin Martin
Production Electrician: Val Zhao
Assistant Production Electrician: Terry Ford

Noah Wrafter
Practical Specialist
wrafterlx.com
nwrafter@bu.edu +1(845)554-2742
NWLX
Light for a Life of Entertainment

BU School Of Theatre

The Rink

Joan Edgar Booth Theatre
820 Commonwealth Avenue, Brookline MA, 02215

Sun/Studio 54 Sign--Wiring(2)

Scale: 1:1

Plate: Det-3.2

Drafted By: Noah Wrafter

11/3/2024

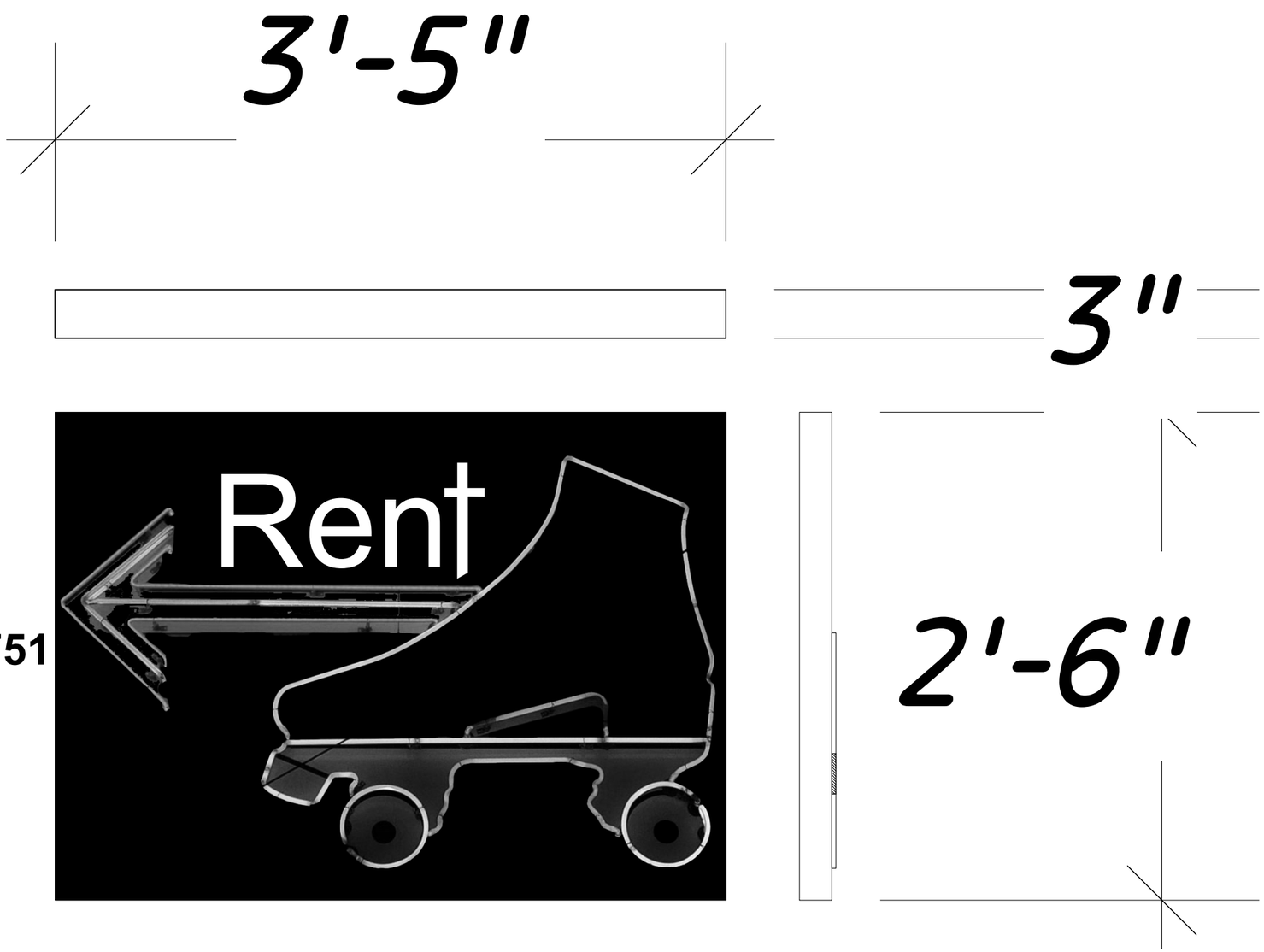

Control Channel 751

"Rent-A-Skate" Sign is a plexiglass topper with contact paper blocking light to create the shapes

Entire box is lit for even look, interior painted white to maximize effectivity

Contacts:

Lighting Designer: Hope Debilius

Assistant Lighting Designer: Davin Martin

Production Electrician: Val Zhao

Assistant Production Electrician: Terry Ford

Noah Wrafter
Practical Specialist
wrafterlx.com
nwrafter@bu.edu +1(845)554-2742

NWLX
Light for a Life of Entertainment

BU School Of Theatre

The Rink

Joan Edgar Booth Theatre
820 Commonwealth Avenue, Brookline MA, 02215

"Rent-A-Skate" Lightbox

Scale: 1:8

Plate: Det-4

Drafted By: Noah Wrafter

11/3/2024

Wired in Parallel

EX.

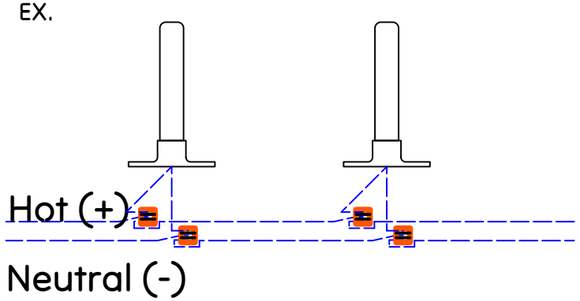

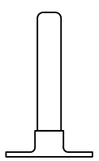

Carnival Socket w/ E26 base

6" Tube Filament Bulb

All Wired with Lamp Cord
Lamps are wired in parrallel as shown above
each connection is made with 3 Wago
Final light will have spare slot

Power input via small hole in rear panel

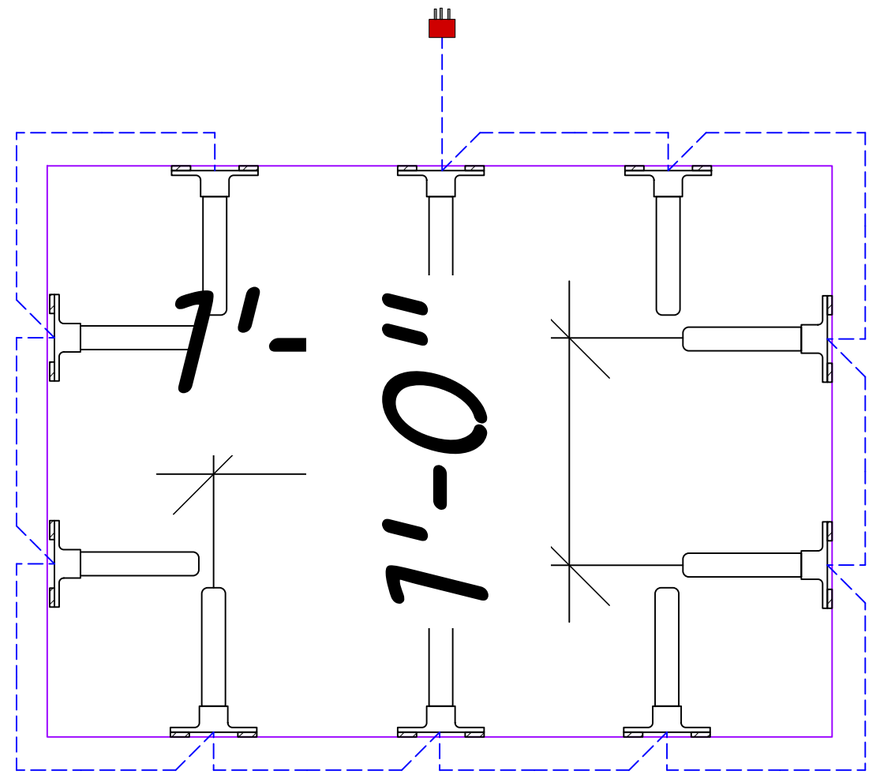

Note: Each lamp lifted by 1/4"

to allow cable to pass between

Contacts:

Lighting Designer: Hope Debilius

Assistant Lighting Designer: Davin Martin

Production Electrician: Val Zhao

Assistant Production Electrician: Terry Ford

Noah Wrafter
Practical Specialist
wrafterlx.com
nwrafter@bu.edu +1(845)554-2742

NWLX
Light for a Life of Entertainment

BU School Of Theatre

The Rink

Joan Edgar Booth Theatre
820 Commonwealth Avenue, Brookline MA, 02215

Rent-A-Skate

Lightbox--Wiring

Scale: 1:8

Drafted By: Noah Wrafter

Plate: Det-4.1

11/3/2024

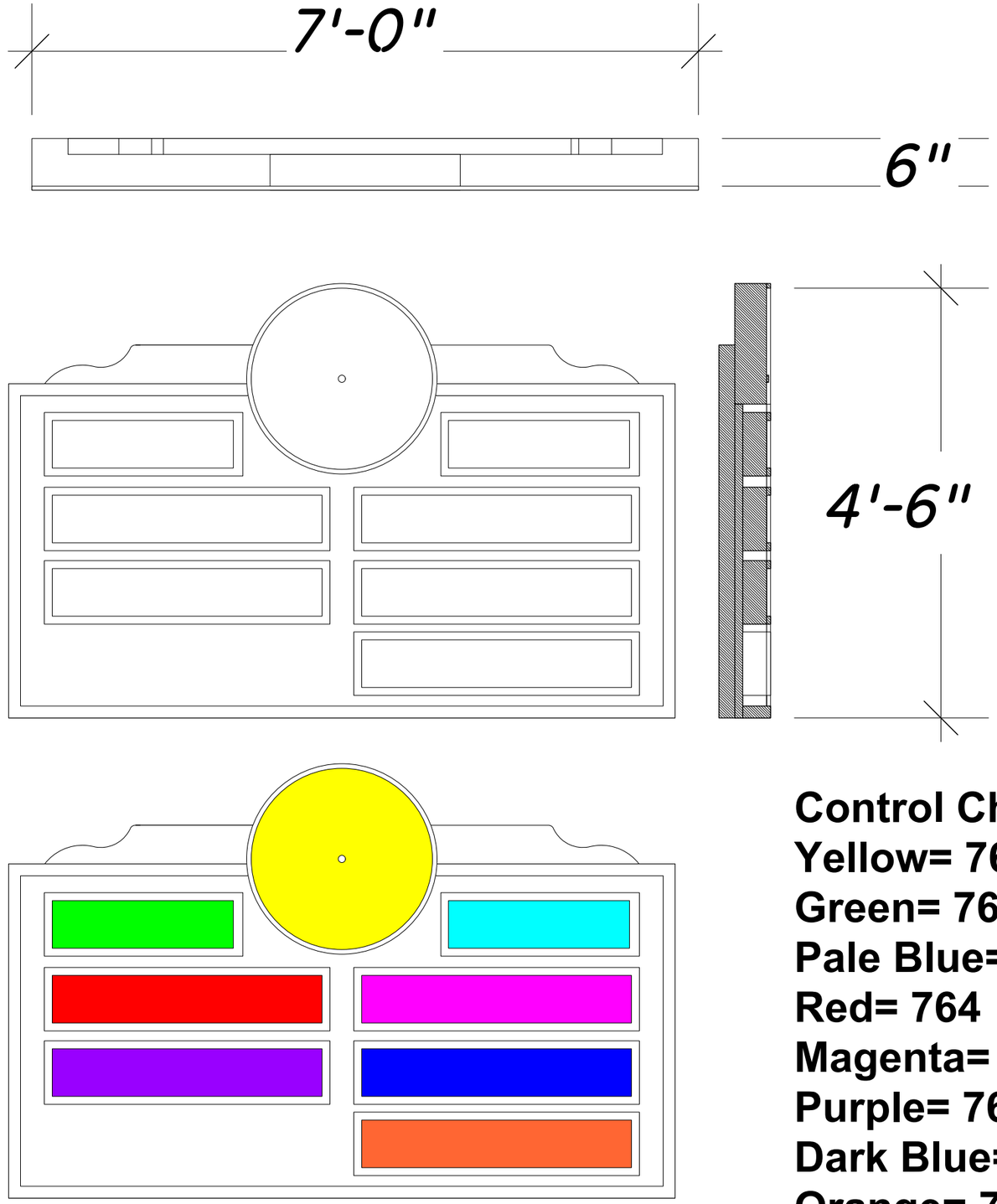

Control Channels:
Yellow= 761
Green= 762
Pale Blue= 763
Red= 764
Magenta= 765
Purple= 766
Dark Blue= 767
Orange= 768

Contacts:

Lighting Designer: Hope Debilius

Assistant Lighting Designer: Davin Martin

Production Electrician: Val Zhao

Assistant Production Electrician: Terry Ford

Noah Wrafter
Practical Specialist
wrafterlx.com
nwrafter@bu.edu +1(845)554-2742

NWLX
Light for a Life of Entertainment

BU School Of Theatre

The Rink

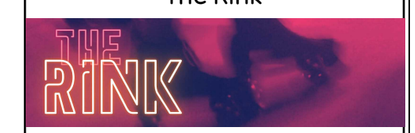

Joan Edgar Booth Theatre
820 Commonwealth Avenue, Brookline MA, 02215

Skater Direction Signs

Scale: 1:16

Drafted By:
Noah Wrafter

Plate: Det-5

11/3/2024

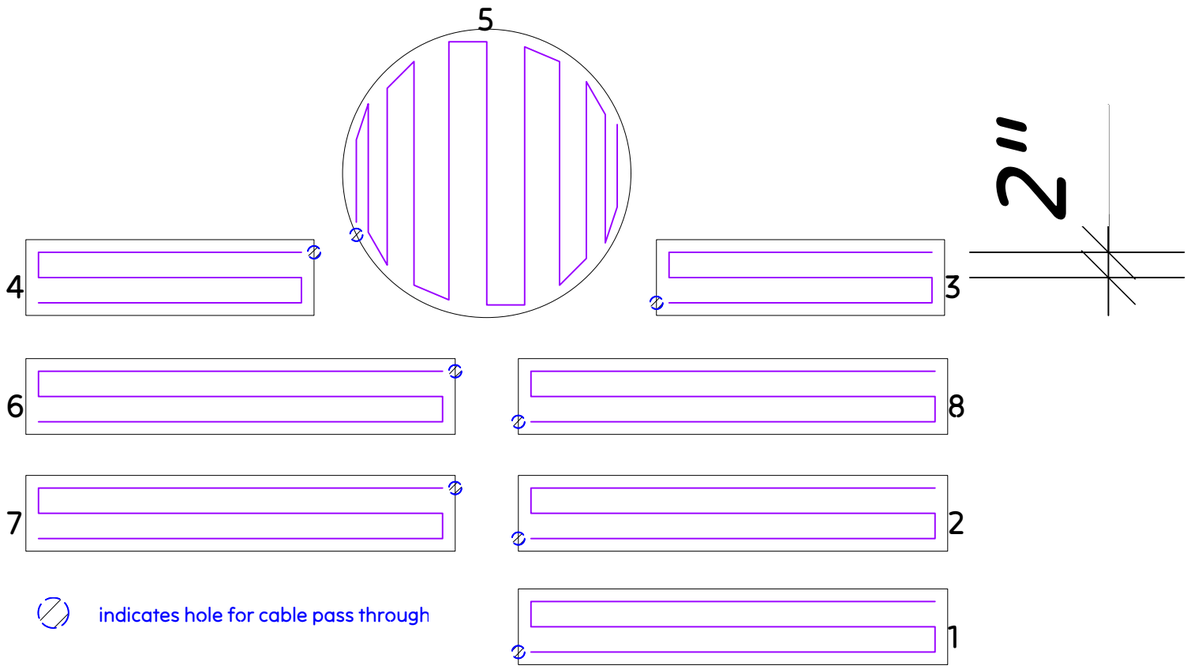

Mains power connects to Power Supply's
Each Supply Powers 1 decoder as drafted
DMX runs into 3-5 Converter and then chains through both Decoders
V+ out of the Decoder runs too a 5 Wago
One hot runs out with Ch1-4
Each box recieves a pair of Hot and Neutral

69' Tape Total

DETAIL VIEW

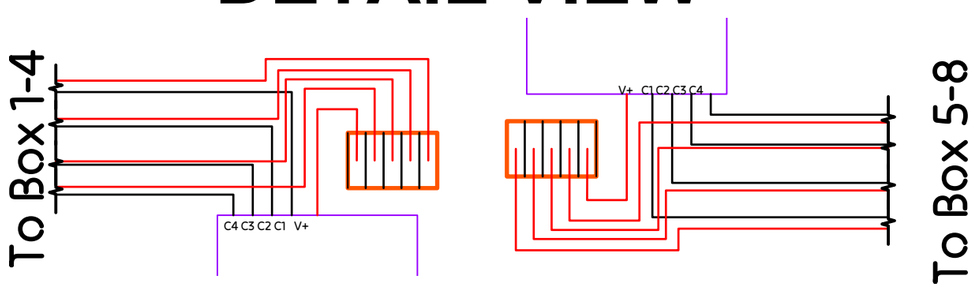

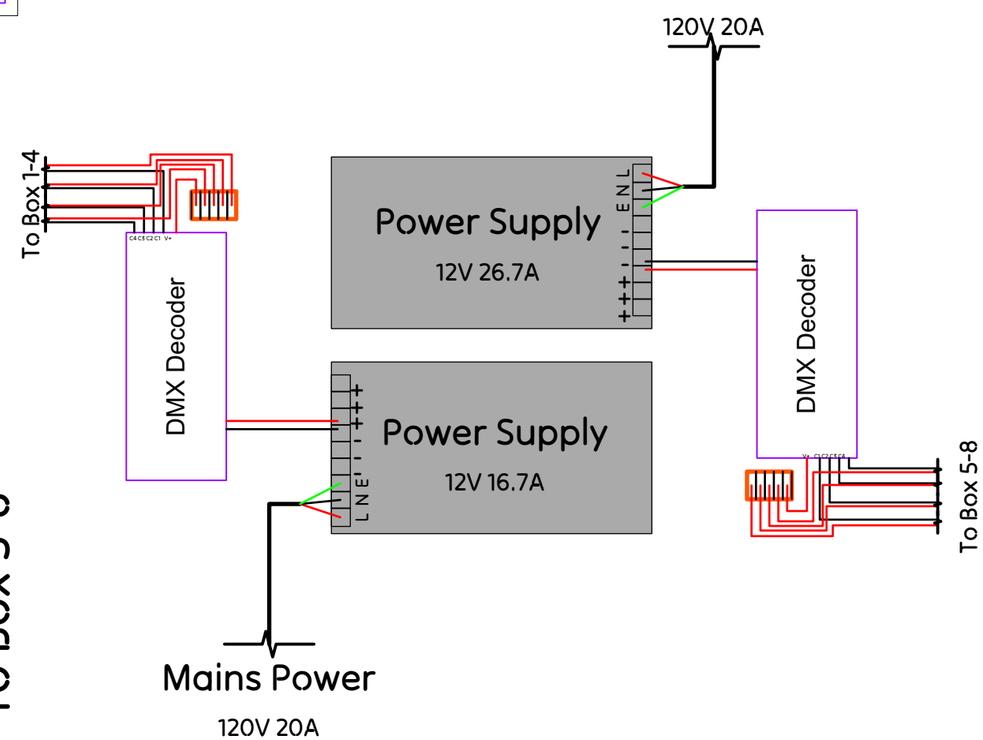

Contacts:

Lighting Designer: Hope Debilius
Assistant Lighting Designer: Davin Martin
Production Electrician: Val Zhao
Assistant Production Electrician: Terry Ford

Noah Wrafter
Practical Specialist
wrafterlx.com
nwrafter@bu.edu +1(845)554-2742
NWLX
Light for a Life of Entertainment

BU School Of Theatre

The Rink

Joan Edgar Booth Theatre
820 Commonwealth Avenue, Brookline MA, 02215

Skater Direction Signs--Wiring

Scale: Not Noted

Drafted By: Noah Wrafter

Plate: Det-5.1

11/3/2024

Translucent Red Globe Bulbs
1.5" Diameter
2 Circuits= 1 Dim, 1 Non-Dim

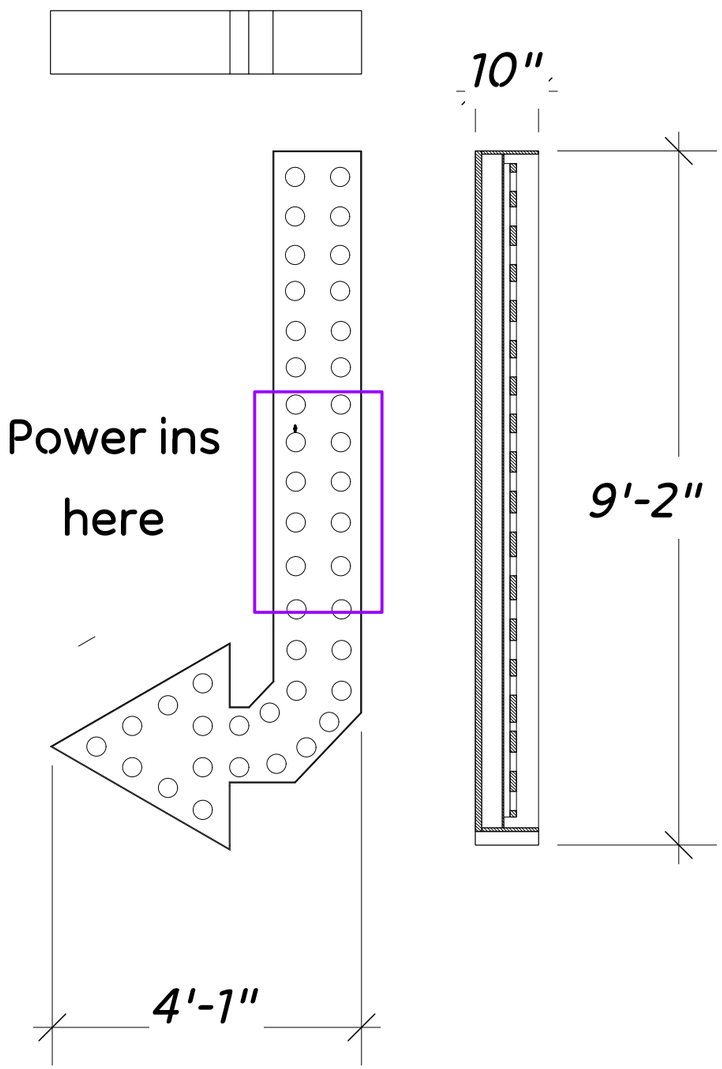

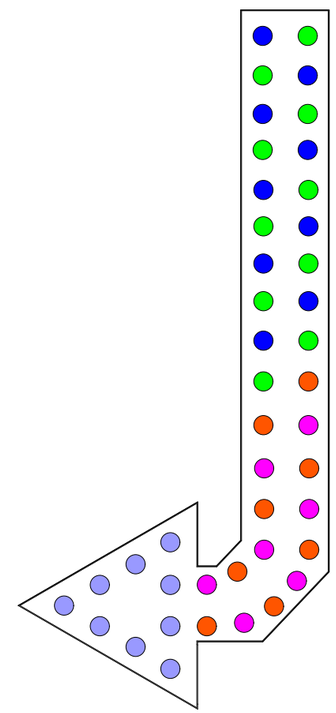

Control Channels:
Blue= 771
Green= 772
Orange= 773
Pink= 774
Lavender= 775

Contacts:
Lighting Designer: Hope Debilius
Assistant Lighting Designer: Davin Martin
Production Electrician: Val Zhao
Assistant Production Electrician: Terry Ford

Noah Wrafter
Practical Specialist
wrafterlx.com
nwrafter@bu.edu +1(845)554-2742
NWLX
Light for a Life of Entertainment

BU School Of Theatre

The Rink

Joan Edgar Booth Theatre
820 Commonwealth Avenue, Brookline MA, 02215

Arrow Sign

Scale: 1:24

Drafted By: Noah Wrafter

Plate: Det-6

11/3/2024

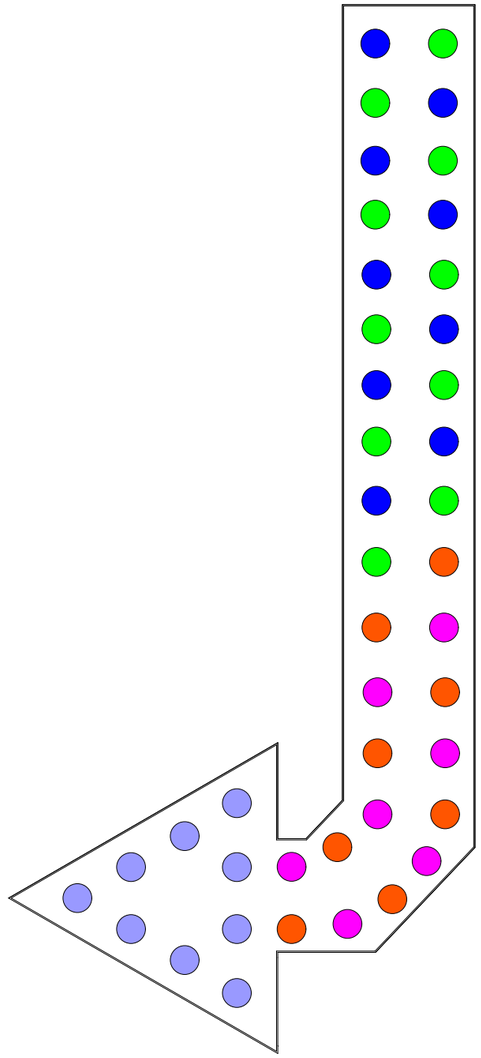

Cable Path-
United

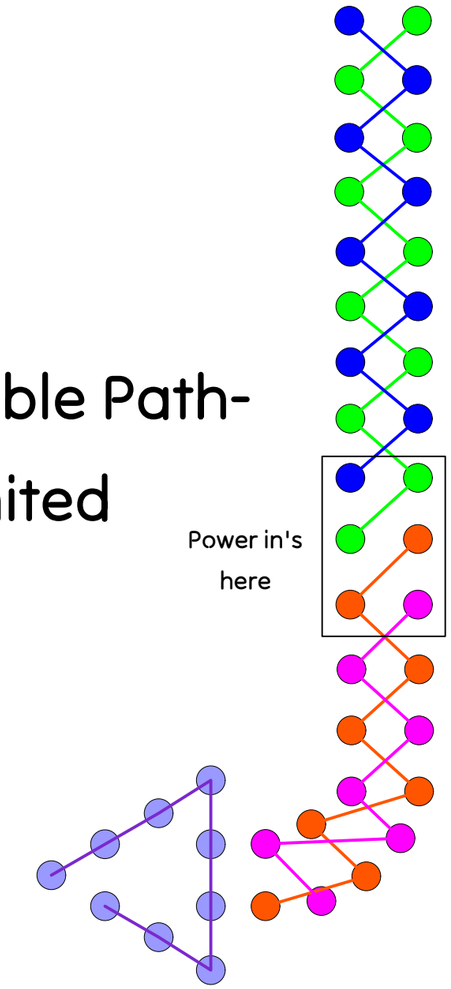

5 Strings
Lav Terminate's as a GPC, other 4 as edison
Edsion plug into DMX Dimmer box
Dimmer box is hung/placed nearbye
Dimmer box recieves Hot power and DMX

Cable Path-
Seperated

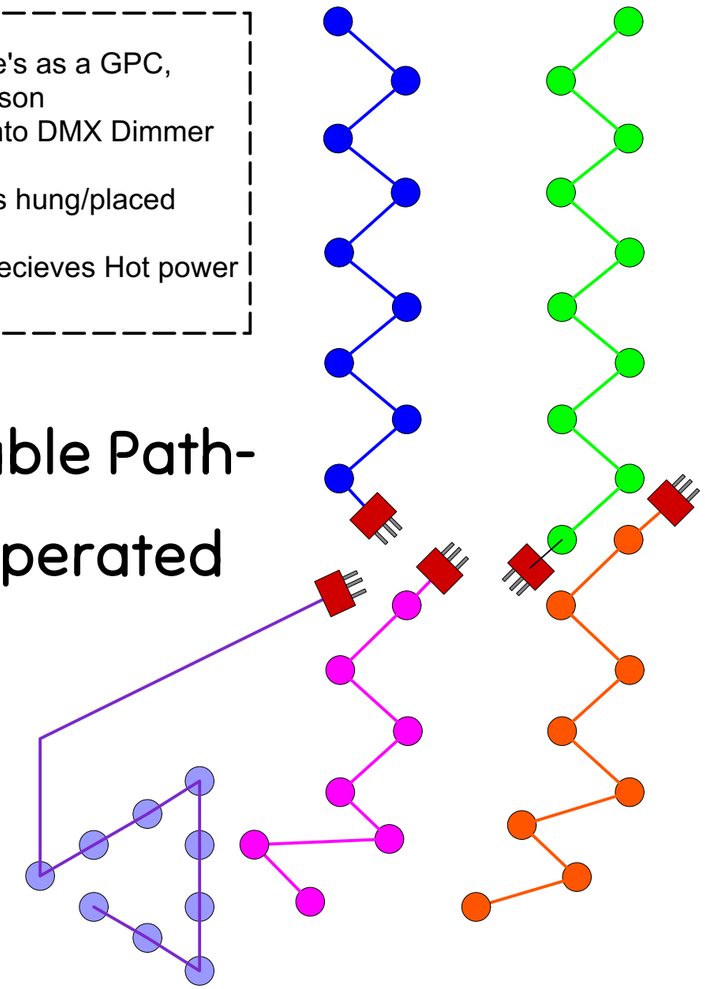

2x 17'& 1x 8' Strands

Contacts:

Lighting Designer: Hope Debilius

Assistant Lighting Designer: Davin Martin

Production Electrician: Val Zhao

Assistant Production Electrician: Terry Ford

Noah Wrafter
Practical Specialist
wrafterlx.com
nwrafter@bu.edu +1(845)554-2742

NWLX
Light for a Life of Entertainment

BU School Of Theatre

The Rink

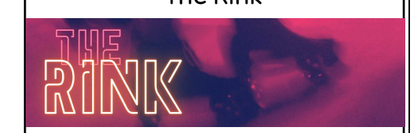

Joan Edgar Booth Theatre
820 Commonwealth Avenue, Brookline MA, 02215

Arrow Sign--Wiring

Scale: 1:16

Drafted By:
Noah Wrafter

Plate: Det-6.1

11/3/2024

Control Channels:

"A"= 701	"N"= 702
"T"= 703	"O"= 704
"N"= 705	"E"= 706
"L"= 707	"L"= 708
"I"= 709	"S"= 710
Blue= 711	Red= 712
Magenta= 713	Green= 714
LED Tape= 721	

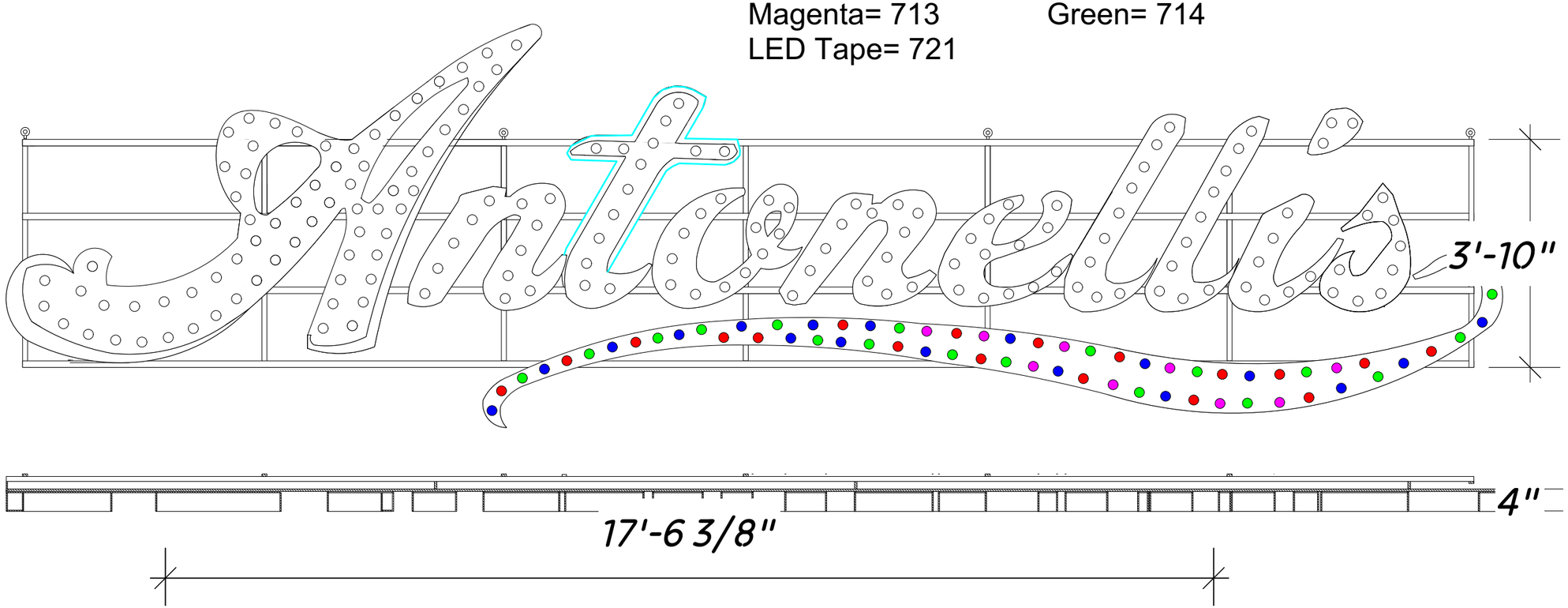

Contacts:

Lighting Designer: Hope Debilius

Assistant Lighting Designer: Davin Martin

Production Electrician: Val Zhao

Assistant Production Electrician: Terry Ford

Noah Wrafter
Practical Specialist
wrafterlx.com
nwrafter@bu.edu +1(845)554-2742

NWLX
Light for a Life of Entertainment

BU School Of Theatre

The Rink

Joan Edgar Booth Theatre
820 Commonwealth Avenue, Brookline MA, 02215

Antonelli's Sign

Scale: 1:24

Plate: Det-7

Drafted By:
Noah Wrafter

11/3/2024

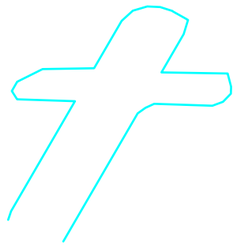

11' total

Tape outlines

T, attached to front

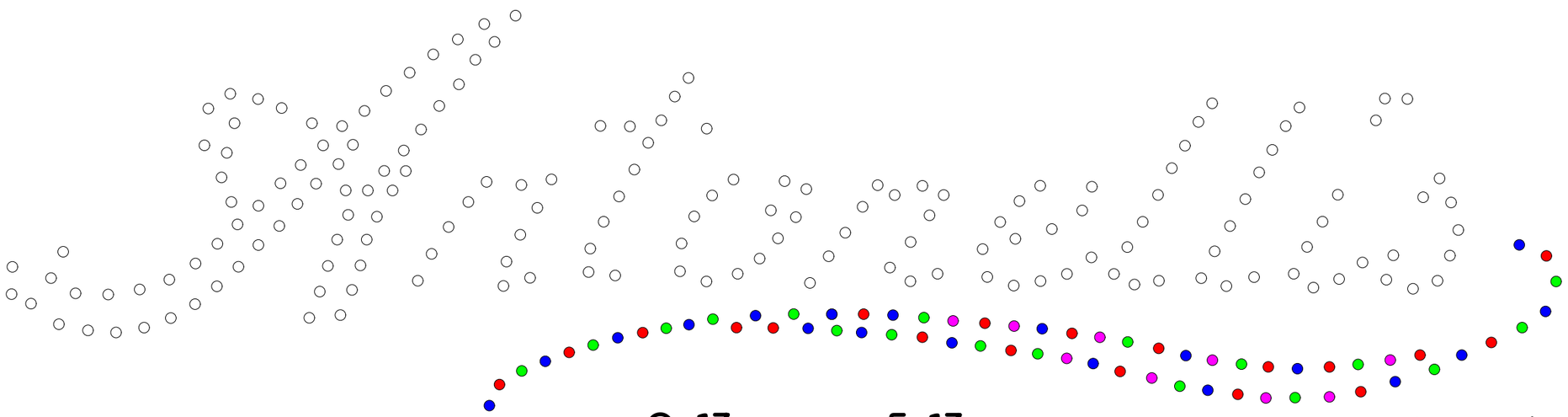

A=69

N(1)=12

T=14

O=13

N(2)=13

E=13

L=10 (X2)

I=10

S=09

Swoosh

17-Red

19- Blue

18- Green

Contacts:

Lighting Designer: Hope Debilius

Assistant Lighting Designer: Davin Martin

Production Electrician: Val Zhao

Assistant Production Electrician: Terry Ford

Noah Wrafter
Practical Specialist
wrafterlx.com
nwrafter@bu.edu +1(845)554-2742

NWLX
Light for a Life of Entertainment

BU School Of Theatre

The Rink

Joan Edgar Booth Theatre
820 Commonwealth Avenue, Brookline MA, 02215

Antonelli's Sign- Wiring

Scale: 1:24

Drafted By:
Noah Wrafter

Plate: Det-7.1

11/3/2024

36'&40' Strands

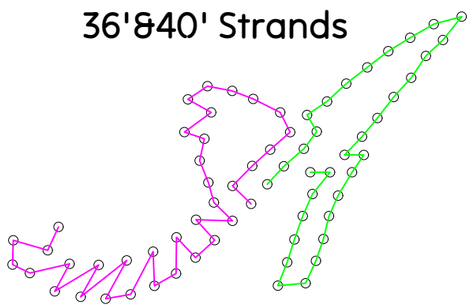

A=69

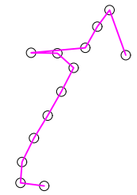

16' Strand

T=14

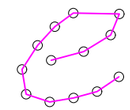

16' Strand

E=13

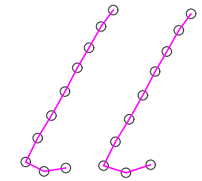

16' Strand 2x

L=10 (2x)

Each letter is 1 or 2 Strings
One end of each stand will terminate in a GPC Male connector
NOTE- I will need a jumper soldered in once in space to connect dot
NOTE some strands may require sockets to be skipped due to spacing

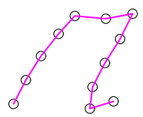

16' Strand

N(1)=12

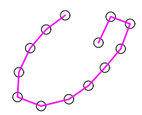

16' Strand

O=13

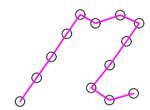

15' Strand

N(2)=13

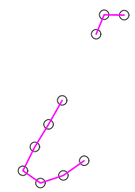

12' Strand

I=10

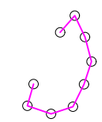

S=09

10' Strand

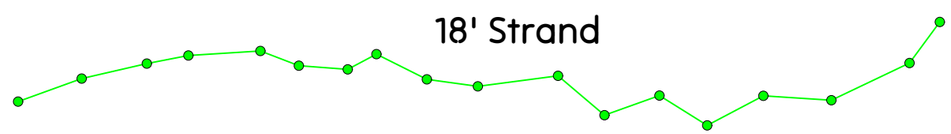

18' Strand

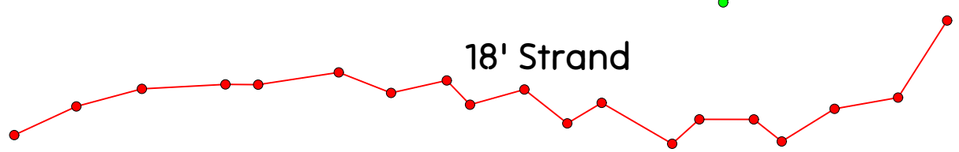

18' Strand

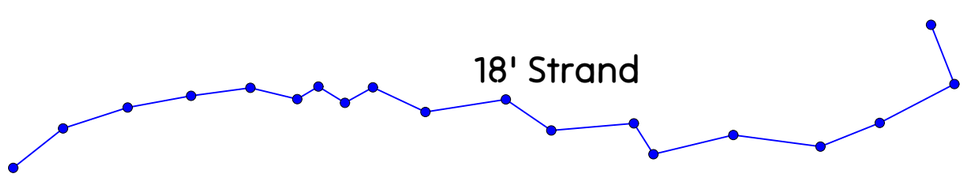

18' Strand

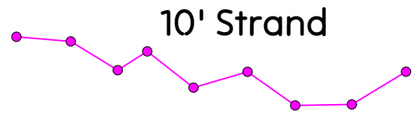

10' Strand

Swoosh

19-Red

19- Blue

18- Green

9-Magenta

Contacts:

Lighting Designer: Hope Debilius

Assistant Lighting Designer: Davin Martin

Production Electrician: Val Zhao

Assistant Production Electrician: Terry Ford

Noah Wrafter
Practical Specialist
wrafterlx.com
nwrafter@bu.edu +1(845)554-2742

NWLX
Light for a Life of Entertainment

BU School Of Theatre

The Rink

Joan Edgar Booth Theatre
820 Commonwealth Avenue, Brookline MA, 02215

Antonelli's Sign- Wiring (2)

Scale: 1:32

Drafted By:
Noah Wrafter

Plate: Det-7.2

11/3/2024

Channels go Clockwise from upper to lower starting at 801

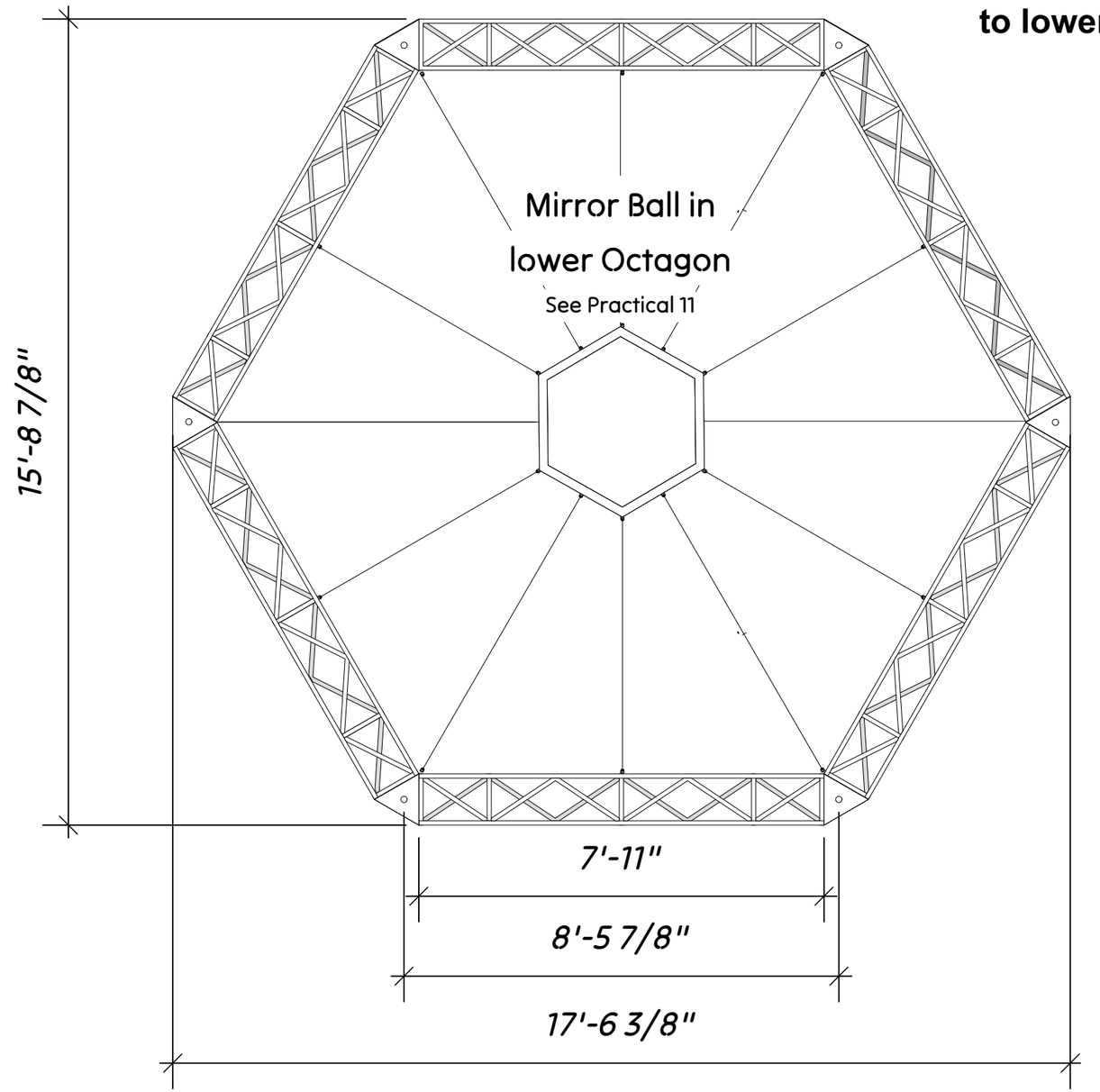

Contacts:

Lighting Designer: Hope Debilius

Assistant Lighting Designer: Davin Martin

Production Electrician: Val Zhao

Assistant Production Electrician: Terry Ford

Noah Wrafter
Practical Specialist
wrafterlx.com
nwrafter@bu.edu +1(845)554-2742

NWLX
Light for a Life of Entertainment

BU School Of Theatre

The Rink

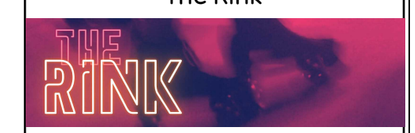

Joan Edgar Booth Theatre
820 Commonwealth Avenue, Brookline MA, 02215

Central Truss

Scale: 1:32

Plate: Det-8

Drafted By: Noah Wrafter

11/3/2024

Vectorworks Educational Version

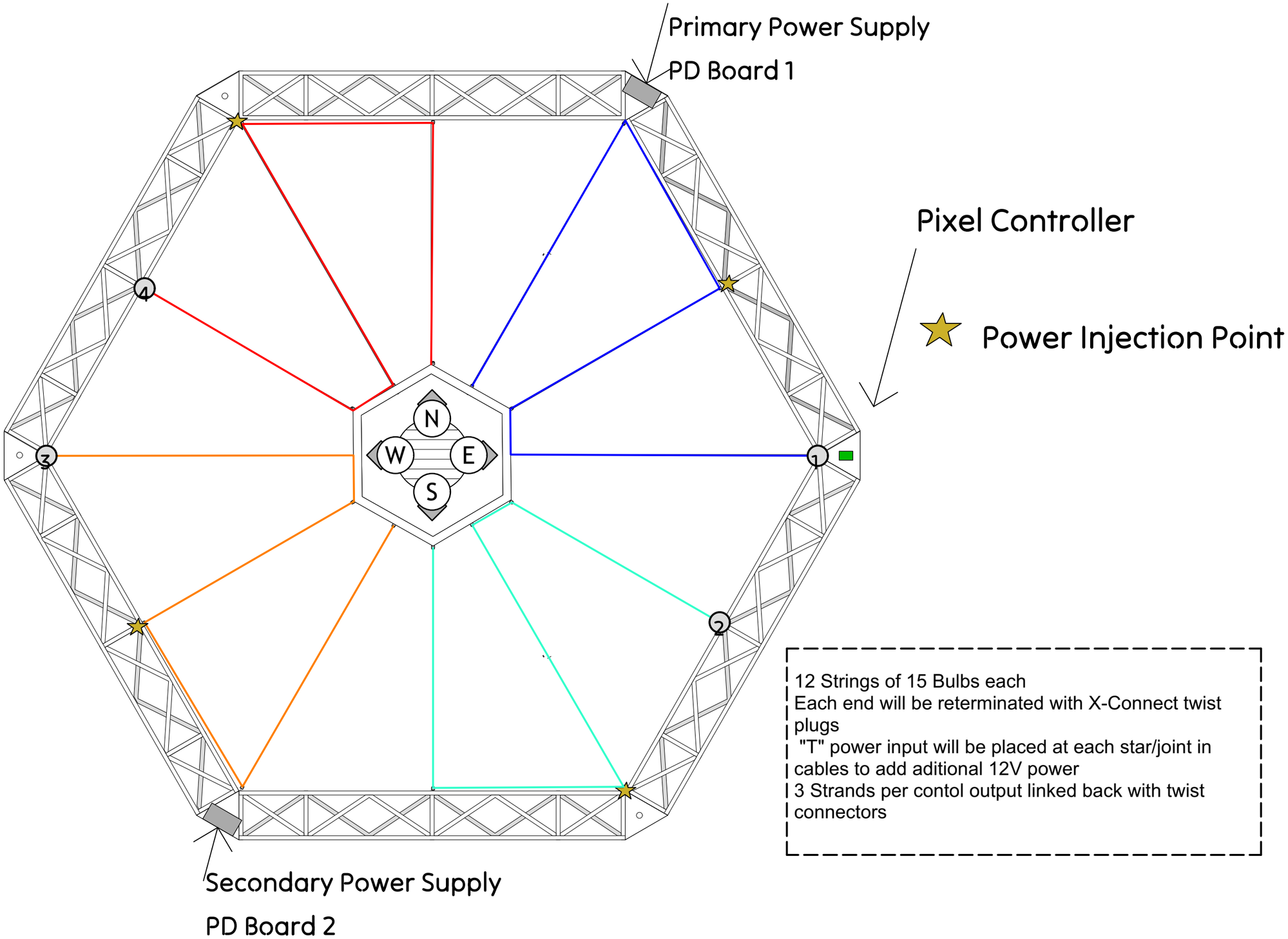

12 Strings of 15 Bulbs each
Each end will be reterminated with X-Connect twist plugs
"T" power input will be placed at each star/joint in cables to add aditional 12V power
3 Strands per contol output linked back with twist connectors

Contacts:

Lighting Designer: Hope Debilius
Assistant Lighting Designer: Davin Martin
Production Electrician: Val Zhao
Assistant Production Electrician: Terry Ford

Noah Wrafter
Practical Specialist
wrafterlx.com
nwrafter@bu.edu +1(845)554-2742

NWLX
Light for a Life of Entertainment

BU School Of Theatre

The Rink

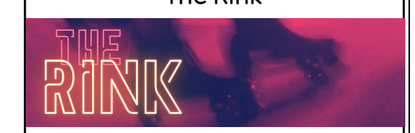

Joan Edgar Booth Theatre
820 Commonwealth Avenue, Brookline MA, 02215

Central Truss--Wiring

Scale: 1:24

Drafted By: Noah Wrafter

Plate: Det-8.1

11/3/2024

Channeling in plot- General rule is Yellow, Purple, Blue for channeling order

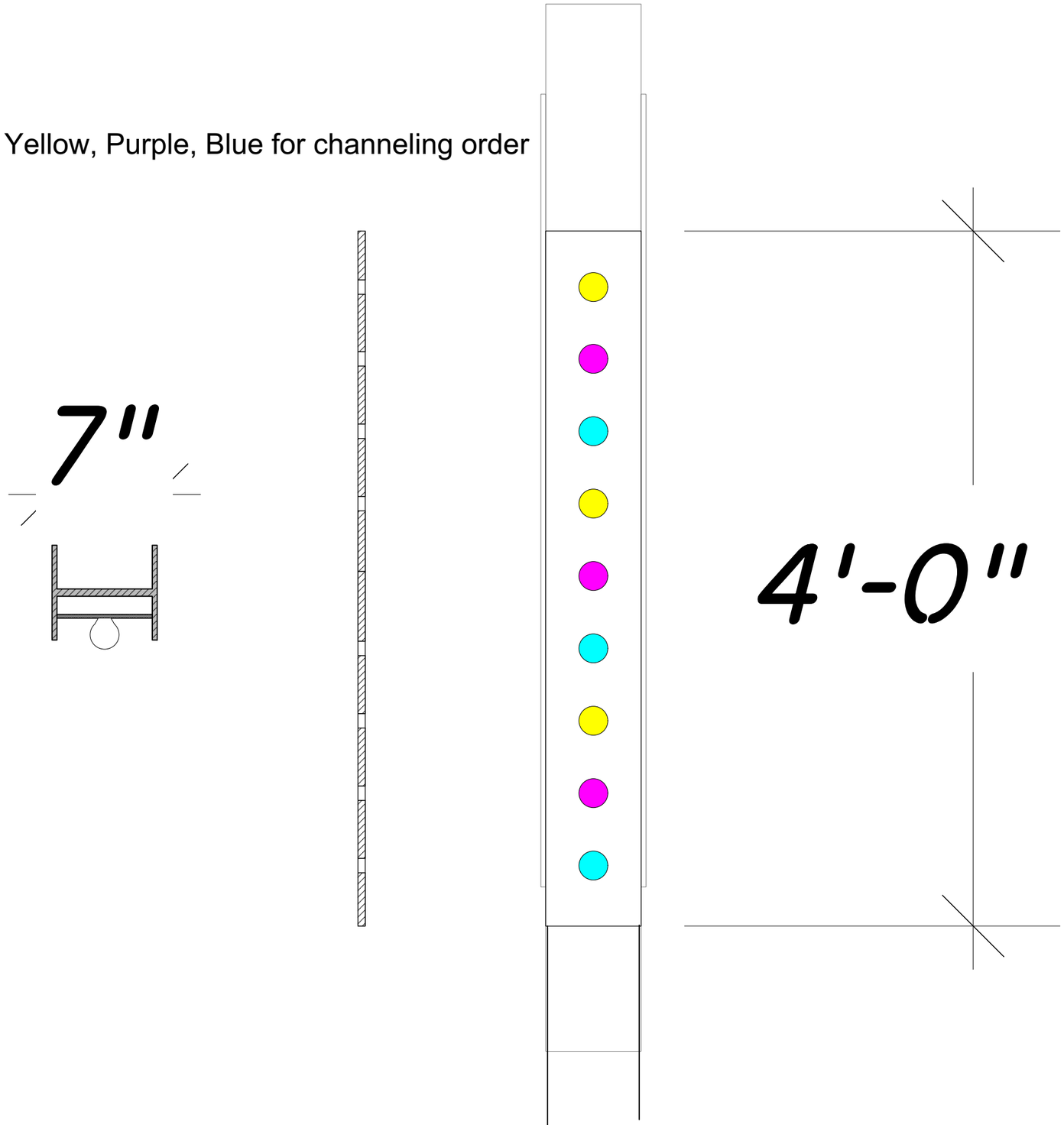

Contacts:

Lighting Designer: Hope Debilius

Assistant Lighting Designer: Davin Martin

Production Electrician: Val Zhao

Assistant Production Electrician: Terry Ford

Noah Wrafter
Practical Specialist
wrafterlx.com
nwrafter@bu.edu +1(845)554-2742

NWLX
Light for a Life of Entertainment

BU School Of Theatre

The Rink

Joan Edgar Booth Theatre
820 Commonwealth Avenue, Brookline MA, 02215

I-Beam Inset Lights

Scale: 1:8

Plate: Det-9

Drafted By: Noah Wrafter

11/3/2024

9 Bulbs

3 Circuits

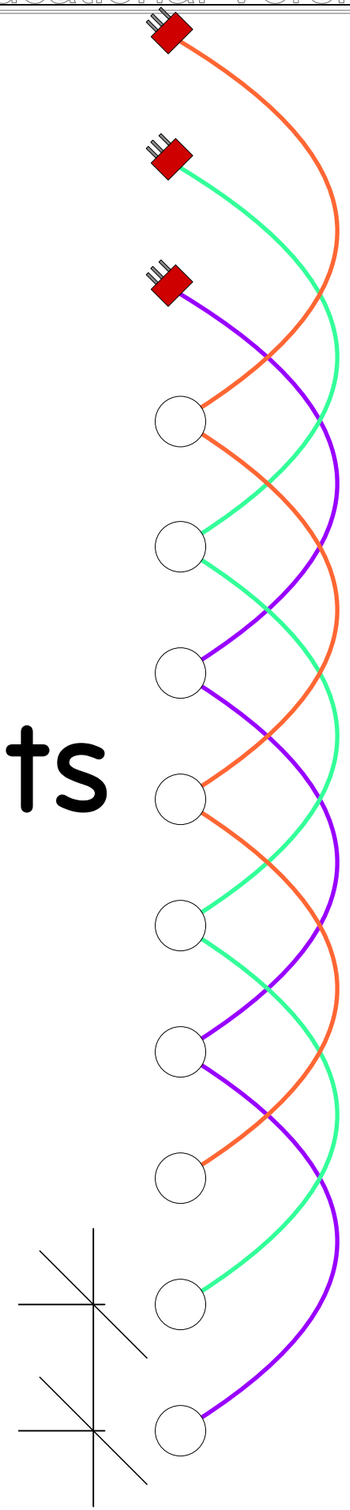

3 short strands per insert
Terminated in Male GPC connectors
May get chained into Pairs, would use lamp cord to link 2 vertically together

Contacts:

Lighting Designer: Hope Debilius
Assistant Lighting Designer: Davin Martin
Production Electrician: Val Zhao
Assistant Production Electrician: Terry Ford

Noah Wrafter
Practical Specialist
wrafterlx.com
nwrafter@bu.edu +1(845)554-2742

NWLX
Light for a Life of Entertainment

BU School Of Theatre

The Rink

Joan Edgar Booth Theatre
820 Commonwealth Avenue, Brookline MA, 02215

I-Beam Inset Lights--Wiring

Scale: 1:6

Drafted By: Noah Wrafter

Plate: Det-9.1

11/3/2024

x5 16' 4.8", x1 8' Tape sections Single Channel control via overlapping address

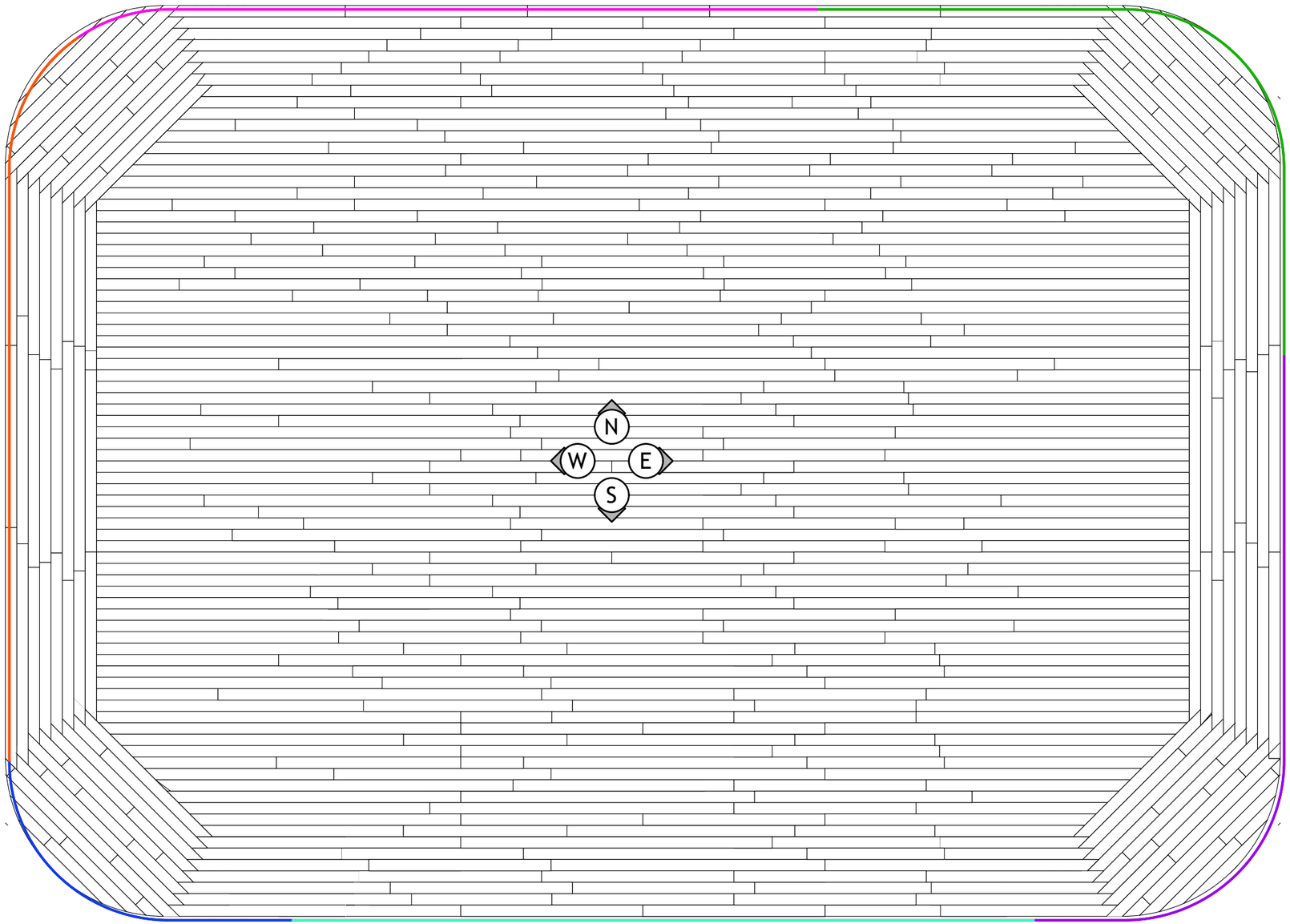

Contacts:

Lighting Designer: Hope Debilius

Assistant Lighting Designer: Davin Martin

Production Electrician: Val Zhao

Assistant Production Electrician: Terry Ford

Noah Wrafter
Practical Specialist
wrafterlx.com
nwrafter@bu.edu +1(845)554-2742

NWLX
Light for a Life of Entertainment

BU School Of Theatre

The Rink

Joan Edgar Booth Theatre
820 Commonwealth Avenue, Brookline MA, 02215

Rink Outline

Scale: 1:32

Drafted By:
Noah Wrafter

Plate: Det-10

11/3/2024

x5 16' 4.8", x1 8' Tape sections Single Channel control via overlapping address

Power Injection Point

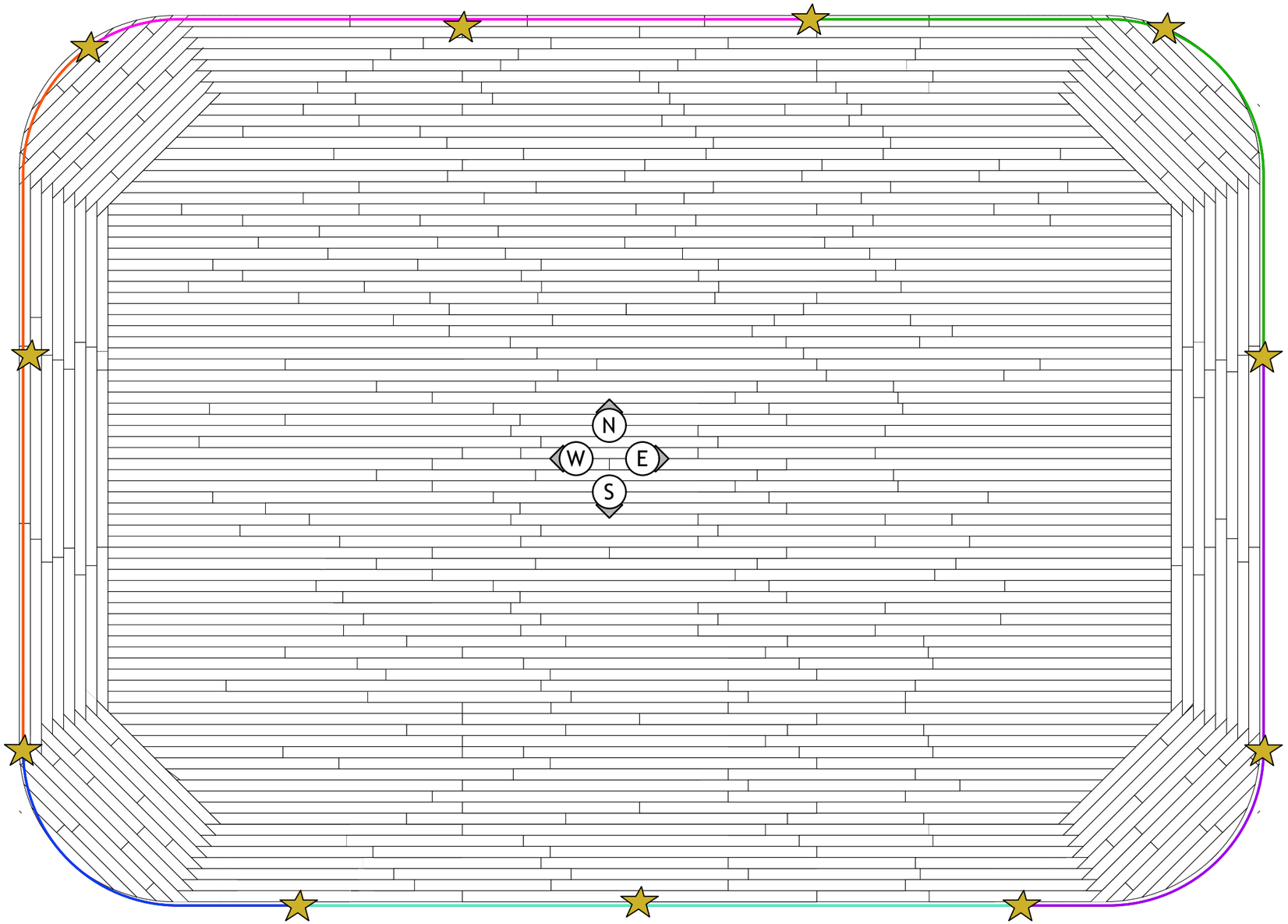

Contacts:

Lighting Designer: Hope Debilius

Assistant Lighting Designer: Davin Martin

Production Electrician: Val Zhao

Assistant Production Electrician: Terry Ford

Noah Wrafter
Practical Specialist
wrafterlx.com
nwrafter@bu.edu +1(845)554-2742

NWLX
Light for a Life of Entertainment

BU School Of Theatre

The Rink

Joan Edgar Booth Theatre
820 Commonwealth Avenue, Brookline MA, 02215

Rink Outline--Wiring

Scale: 1:32

Drafted By:
Noah Wrafter

Plate: Det-10.1

11/3/2024

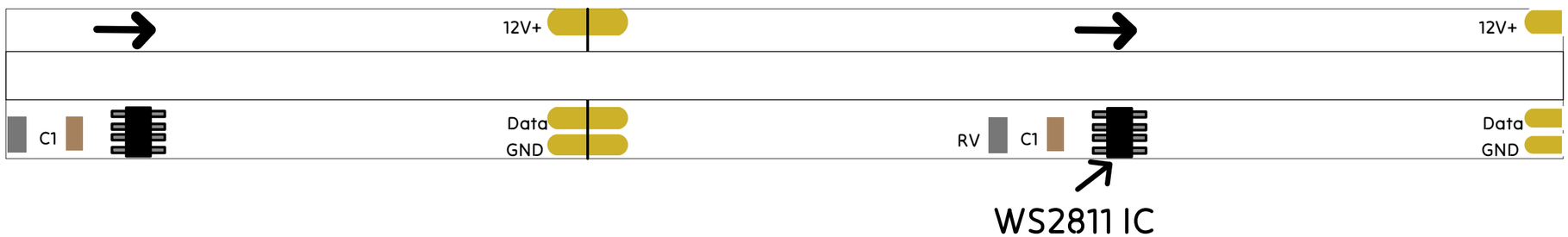

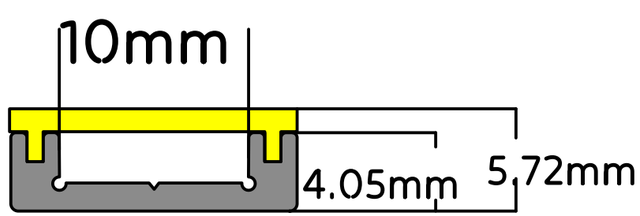

Screw Mounting Channel to Block

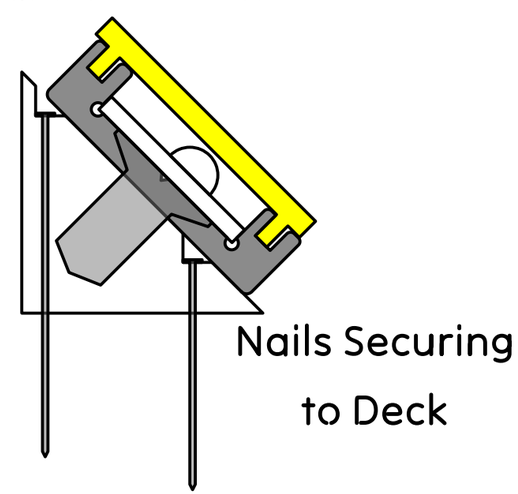

Contacts:

Lighting Designer: Hope Debilius

Assistant Lighting Designer: Davin Martin

Production Electrician: Val Zhao

Assistant Production Electrician: Terry Ford

Noah Wrafter
Practical Specialist
wrafterlx.com
nwrafter@bu.edu +1(845)554-2742

NWLX
Light for a Life of Entertainment

BU School Of Theatre

The Rink

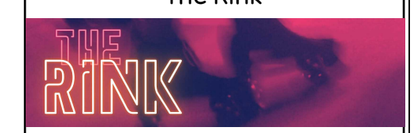

Joan Edgar Booth Theatre
820 Commonwealth Avenue, Brookline MA, 02215

Rink Outline--CHANNEL

Scale: 1:32

Drafted By: Noah Wrafter

Plate: Det-10.2

11/3/2024

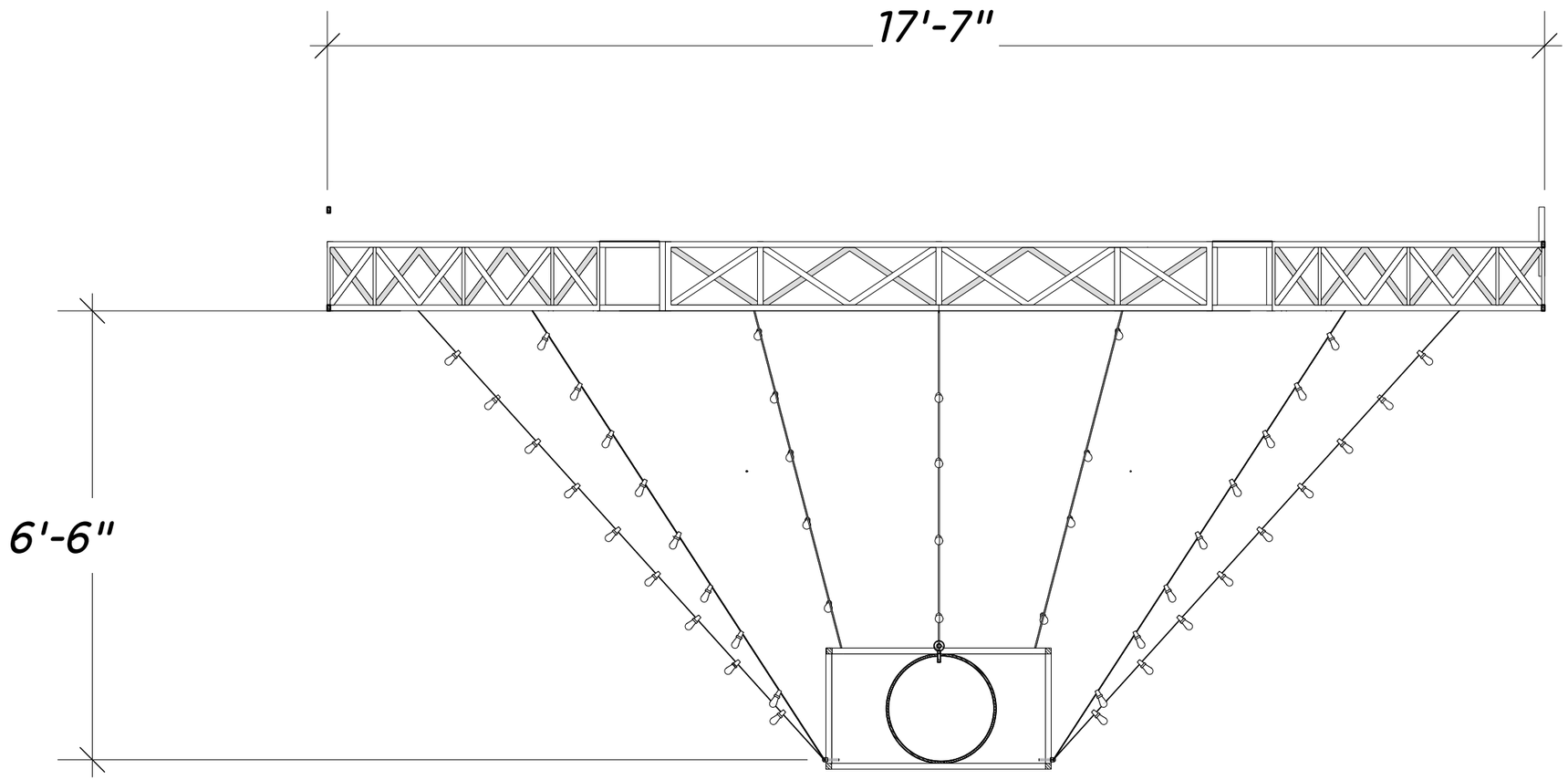

Motor Channel is 881

Contacts:

Lighting Designer: Hope Debilius

Assistant Lighting Designer: Davin Martin

Production Electrician: Val Zhao

Assistant Production Electrician: Terry Ford

Noah Wrafter
Practical Specialist
wrafterlx.com
nwrafter@bu.edu +1(845)554-2742

NWLX
Light for a Life of Entertainment

BU School Of Theatre

The Rink

Joan Edgar Booth Theatre
820 Commonwealth Avenue, Brookline MA, 02215

Cntr Spinning Mirror Ball

Scale: 1:24

Plate: Det-11

Drafted By: Noah Wrafter

11/3/2024

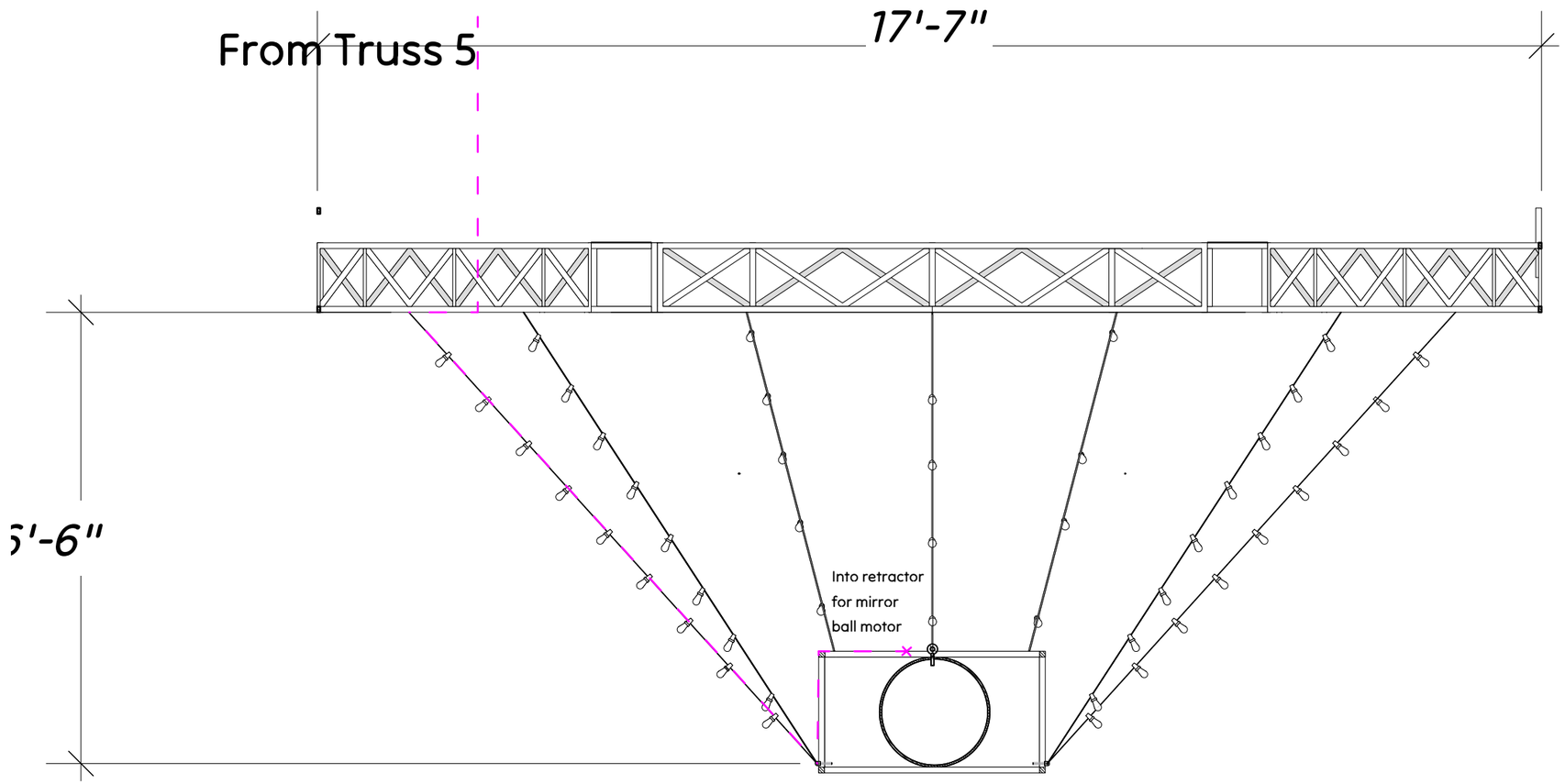

Lamp cord connects power drop from truss too center truss for mirror ball motor power

Contacts:

Lighting Designer: Hope Debilius

Assistant Lighting Designer: Davin Martin

Production Electrician: Val Zhao

Assistant Production Electrician: Terry Ford

Noah Wrafter
Practical Specialist
wrafterlx.com
nwrafter@bu.edu +1(845)554-2742

NWLX
Light for a Life of Entertainment

BU School Of Theatre

The Rink

Joan Edgar Booth Theatre
820 Commonwealth Avenue, Brookline MA, 02215

Cntr Spinning MB--Wiring

Scale: 1:24

Drafted By: Noah Wrafter

Plate: Det-11.1

11/3/2024

ADD LOGO HERE

NWLX

Light for a Life of Entertainment

Upgrade Cost Out

Boston University School of Theatre

Joan Edgar Booth Theatre

820 Commonwealth Avenue, Brookline MA 02215

nwrafter@bu.edu, (845)554-2742

PLEASE READ- Notes About the Documentation

All prices are based on prices at the time of the quote being written and does not include Tax, shipping, or any bulk handling fees that may be incurred

Full Size Drafting plates and details are available on the Drive

Table of Contents

Unit 1: Hand Held

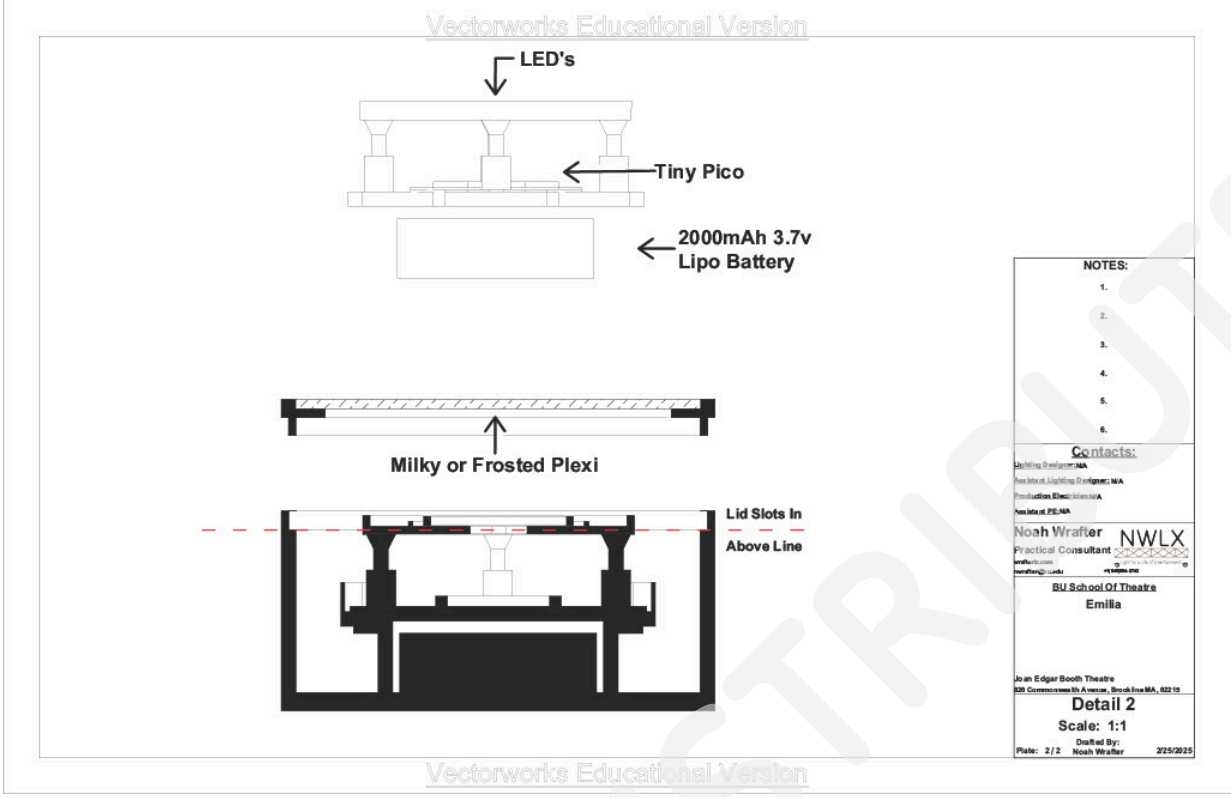

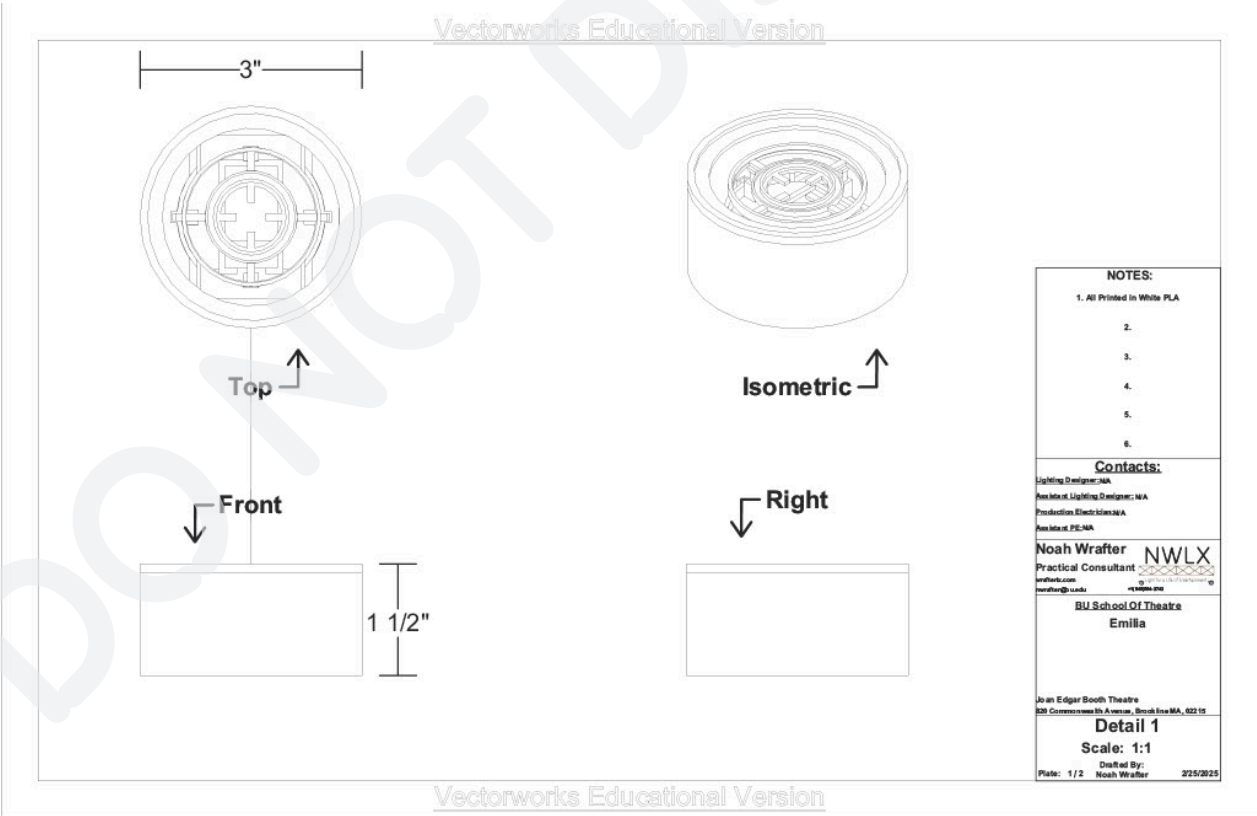

Component Costout

#1- Single Unit

Item	Quantity	Cost (x1)	Cost (Total)	Link
Tiny Pico ESP32 Chipset	1	$21.95	$21.95	LINK
Neopixel Ring 16 RGB	1	$9.95	$9.95	LINK
Neopixel Jewel 7 RGBW	1	$6.95	$6.95	LINK
3.7V Battery 2000MAH	1	$9.49	$9.49	LINK
300-500ohm resistor	1	$7.99	$7.99	LINK
Battery Charger	1	$9.99	$9.99	LINK
			$0.00	LINK
For 1	**Practical Total:**		$66.32	

#2- Thirteen Units

Item	Quantity	Cost (x1)	Cost (Total)	Link
Tiny Pico ESP32 Chipset	13	$21.95	$285.35	LINK
Neopixel Ring 16 RGB	13	$9.95	$129.35	LINK
Neopixel Jewel 7 RGBW	13	$6.95	$90.35	LINK
3.7V Battery 2000MAH	13	$6.73	$87.46	LINK
300-500ohm resistor	1	$0.00	$0.00	LINK
Battery Charger	3	$9.99	$29.97	LINK
			$0.00	LINK
For 13	**Practical Total:**		$622.48	

#3- Ten Units

Item	Quantity	Cost (x1)	Cost (Total)	Link
Tiny Pico ESP32 Chipset	10	$21.95	$219.50	LINK
Neopixel Ring 16 RGB	10	$9.95	$99.50	LINK
Neopixel Jewel 7 RGBW	10	$6.95	$69.50	LINK
3.7V Battery 2000MAH	10	$6.69	$66.88	LINK
300-500ohm resistor	1	$0.00	$0.00	LINK
Battery Charger	2	$9.99	$19.98	LINK
			$0.00	LINK
For 10, w/ 3 supplied by Noahs Thesis	**Practical Total:**		$475.36	

#4- Ten Units w/ Offbrand Chips

Item	Quantity	Cost (x1)	Cost (Total)	Link
Tiny Pico ESP32 Chipset	10	$21.95	$219.50	LINK
N/A Ring 16 RGB (x5)	2	$18.99	$37.98	LINK
N/A Jewel 7 RGB (x7)	2	$15.99	$31.98	LINK
3.7V Battery 2000MAH	10	$6.69	$66.88	LINK
300-500ohm resistor	1	$0.00	$0.00	LINK
Battery Charger	2	$9.99	$19.98	LINK
			$0.00	LINK
For 10, w/ 3 supplied by Noahs Thesis	**Practical Total:**		$376.32	Unbranded LEDS

While there are lots of different chips in pixels there are actually very few distinct protocols. This is our best understanding of those the controller is compatible with. If you have a different chip please feel free to contact us and we would be happy to investigate the feasibility of adding support.

Type	Alternatives	Channels	Bits per channel	Wires	Max pixels when 32 ports or less	Max pixels when > 32 ports	Supported On Remotes	Notes
WS2811	APA104 APA106 CS8812 GS8202 GS8206 GS8208 INK1002 INK1003 LB1908 LPD1882 LX1203 P9883 SK6812 (RGB) SK6813 SK6822 SM16703 SM16711 SM16712 TM1803 TM1804 TM1809 TM1812 TM1914 UCS1903 UCS1904 UCS1909 UCS1912 UCS2903 UCS2909 UCS2912 UCS9812 WS2811 WS2812 WS2813 WS2815 WS2818	3	8	3	1024	704	Y	
WS2811 Slow	Same as WS2811 but @ 400KHz	3	8	3	512	352	Y	
APA102	APA101 APA102	3	8	4	766	526		

Type	Alternatives	Channels	Bits per channel	Wires	Max pixels when 32 ports or less	Max pixels when > 32 ports	Supported On Remotes	Notes
	APA102C HD107S SK9822							
APA109	APA109 SK6812 (RGBW) SK6818 SM16704 UCS2904 WS2814	4	8	3	768	528	Y	These expect 4 channels of input data per pixel.
DMX512P	DMX512 UCS512 WS2822	3	8	2	743	510	Y	These pixels expect true DMX protocol. They can be run from the DMX port or from the receiver port using custom wiring. Contact support@pixelcontroller.com for details.
DMX512P-4	UCS512C4	4	8	2	557	382	Y	These pixels expect true DMX protocol. They can be run from the DMX port or from the receiver port using custom wiring. Contact support@pixelcontroller.com for details.
TLS3001	CY3005 TLS3001 TLS3002 QED3001	3	12	3	288	192		
LPD6803	D705 LPD1101 LPD6803 UCS6909 UCS6912S	3	5	4	1024	704		
LPD8806	LPD8803 LPD8806 LPD8809 UCS8812	3	7	4	990	670		
WS2801	WS2801 WS2803	3	8	4	1024	704		
SM16716	SM16716 SM16726	3	8	4	981	673		
TM1814	TM1814	4	8	3	766	526	Y	These expect 4 channels of input data per pixel.

Type	Alternatives	Channels	Bits per channel	Wires	Max pixels when 32 ports or less	Max pixels when > 32 ports	Supported On Remotes	Notes
TM1829	TM1829	3	5	3	1023	703	Y	
UCS8903	UCS8903	3	16	3	512	352	Y	This takes 3 x 8 bit values in the input data and expands it to 16 bit values.
UCS8903 (16)	UCS8903 (16)	6	16	3	512	352	Y	This expects 3 x 16 bit values in the input data.
UCS8904	UCS8904	4	16	3	384	264	Y	This takes 4 x 8 bit values in the input data and expands it to 16 bit values.
UCS8904 (16)	UCS8904 (16)	4	16	3	384	264	Y	This expects 4 x 16 bit values in the input data.
GW6205 (Not supported)		0	12	0	0	0		
MBI6020 (Not supported)		0	10	4	0	0		
MY9221 (Not supported)	MY9231?	3	16	4	0	0		
MY9291 (Not supported)		4	16	4	0	0		
P9813 (Not supported)		3	6	4	0	0		
SJ1221	UCS5603	3	12	3	339	232		
SM16825		5	16	3	306	210	Y	This takes 5 x 8 bit values in the input data and expands it to 16 bit values.
SM16825 (16)		5	16	3	306	210	Y	This expects 5 x 16 bit values in the input data.
TLS3008 (Not supported)		3	8	3	0	0		

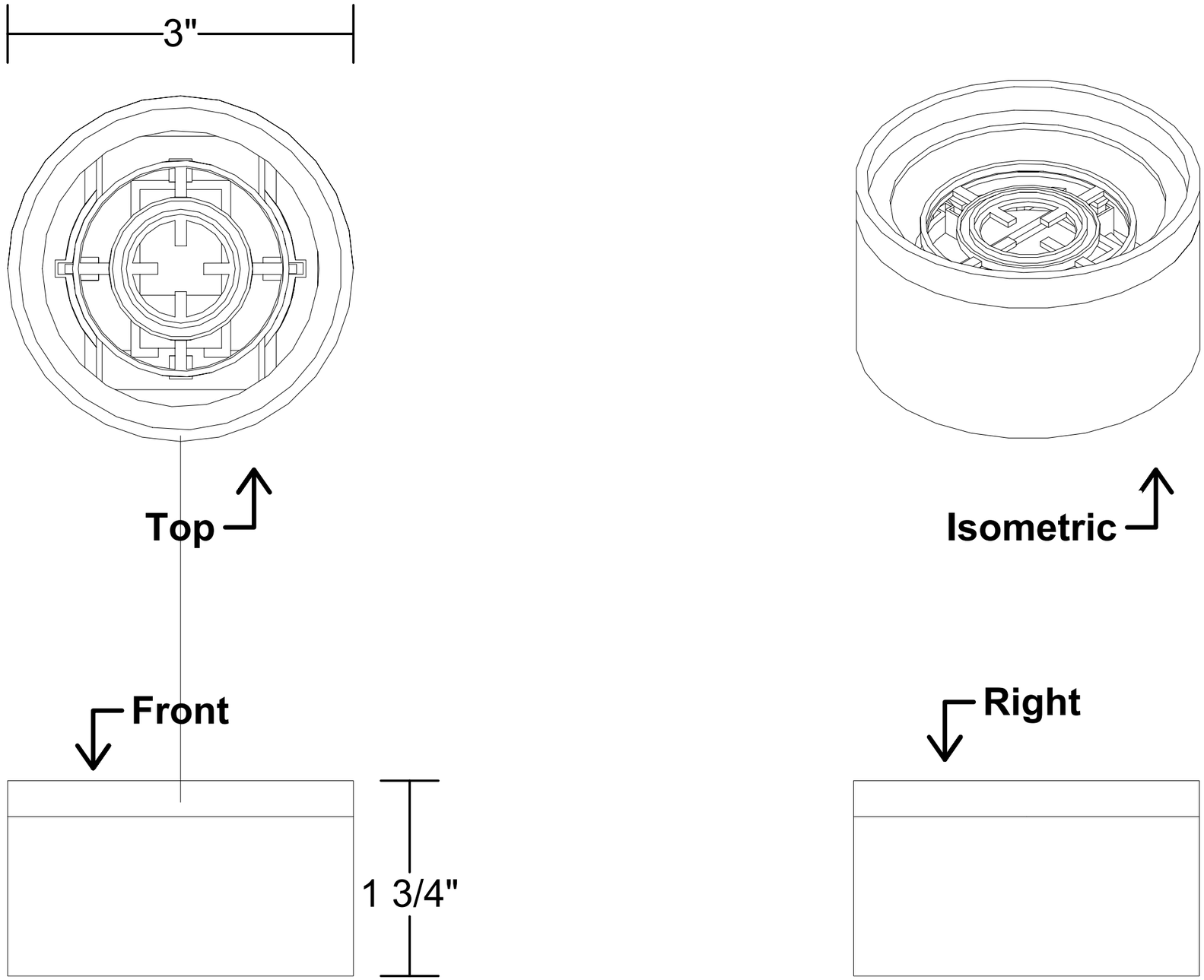

Contacts:

Lighting Designer: Zachary Connel

Assistant Lighting Designer: Ailsa Smith

Production Electrician: Darius Evans

Assistant Production Electrician: Bianca Akoa

Noah Wrafter
Practical Consultant
wrafterlx.com
nwrafter@bu.edu +1(845)554-2742

NWLX
Light for a Life of Entertainment

BU School Of Theatre

Emilia

Joan Edgar Booth Theatre
820 Commonwealth Avenue, Brookline MA, 02215

Detail 1

Scale: 1:1

Drafted By:
Noah Wrafter

Plate: 1 / 5

4/4/2025

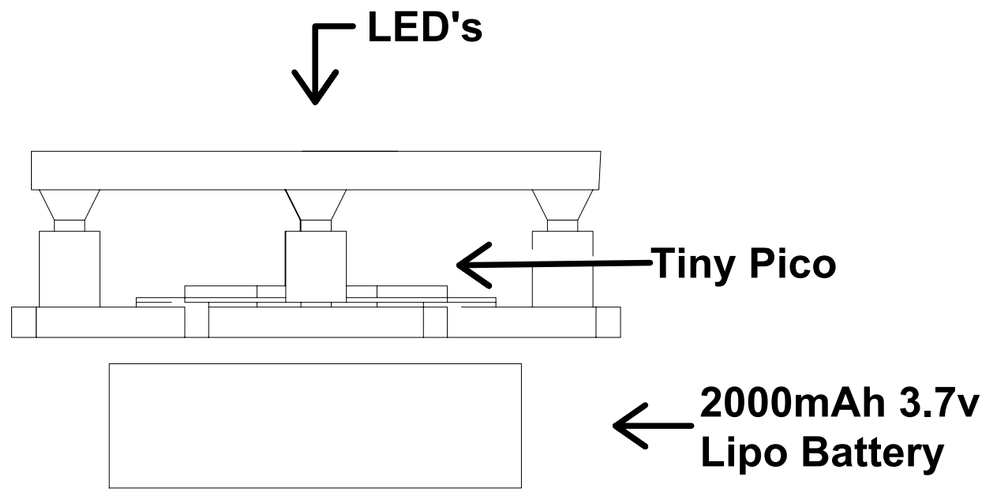

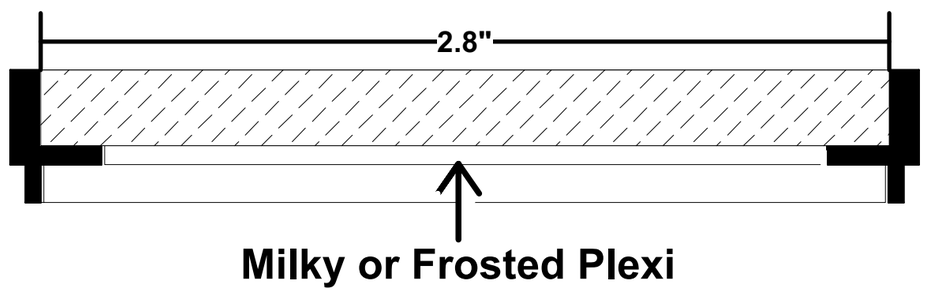

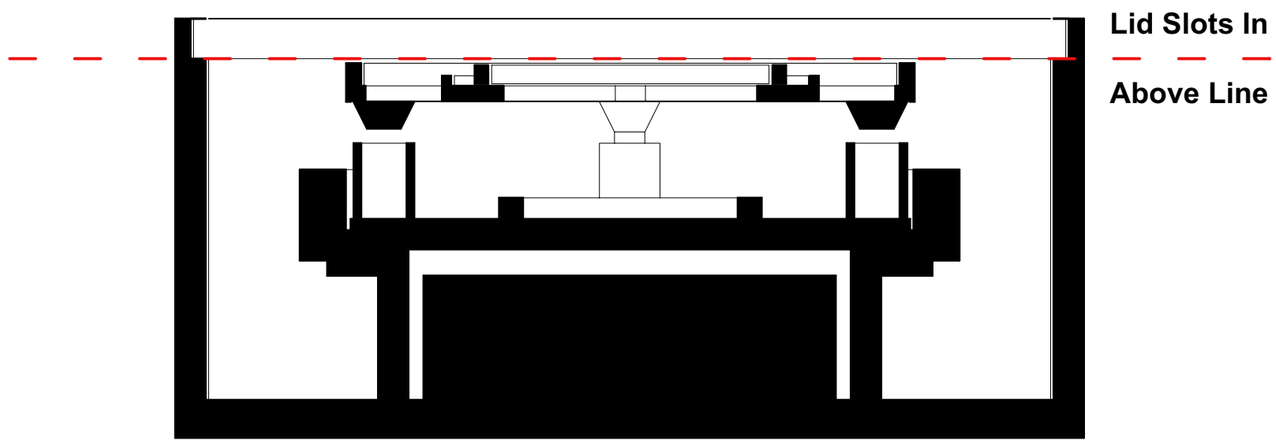

Contacts:

Lighting Designer: Zachary Connel

Assistant Lighting Designer: Ailsa Smith

Production Electrician: Darius Evans

Assistant Production Electrician: Bianca Akoa

Noah Wrafter
Practical Consultant
wrafterlx.com
nwrafter@bu.edu +1(845)554-2742

NWLX
Light for a Life of Entertainment

BU School Of Theatre

Emilia

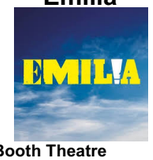

Joan Edgar Booth Theatre
820 Commonwealth Avenue, Brookline MA, 02215

Detail 2

Scale: 1:0.5

Plate: 2 / 5

Drafted By:
Noah Wrafter

4/4/2025

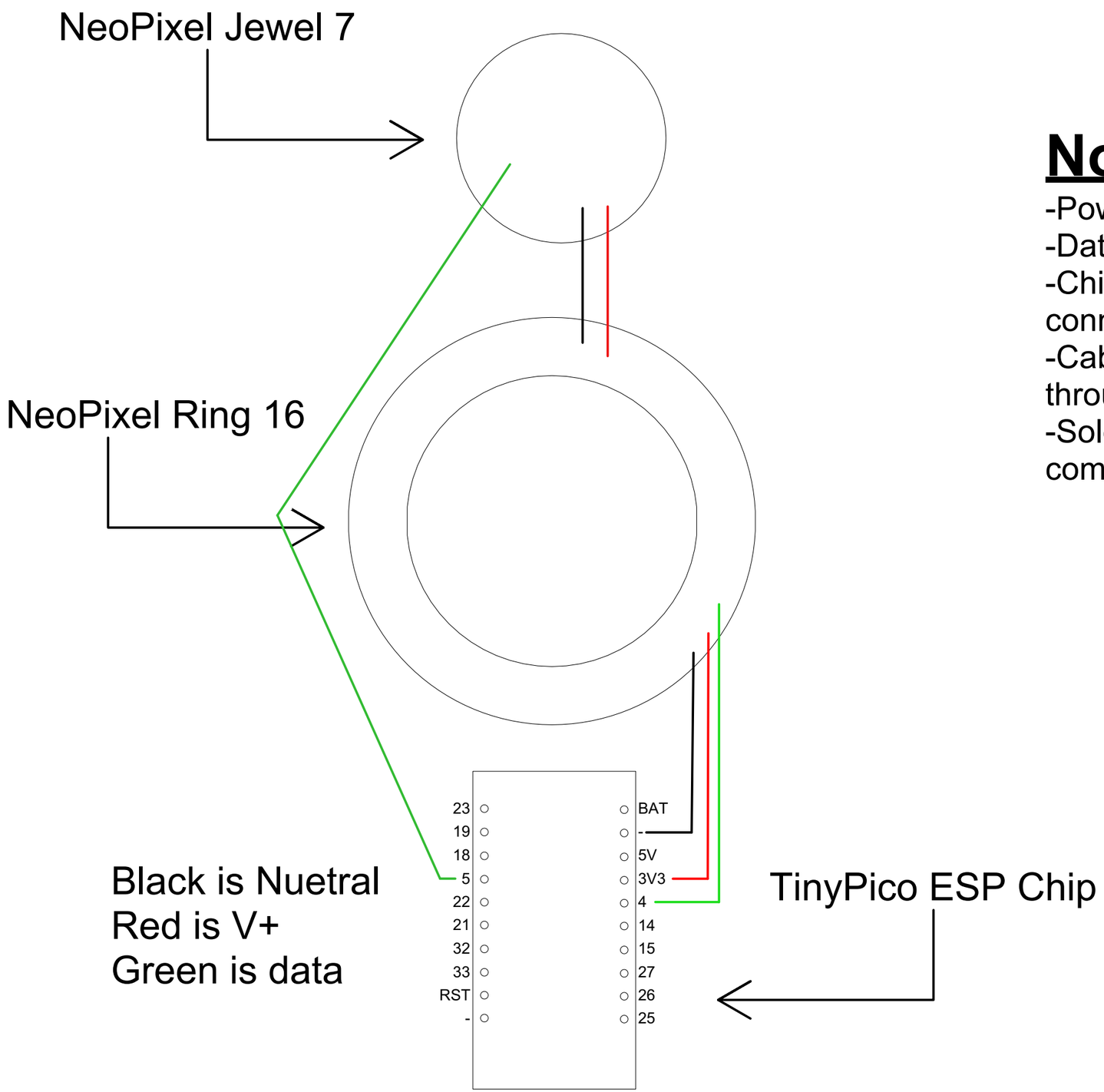

Notes:

-Power chains through the LEDs
-Data is seperate per chip
-Chip powered via a battery with a JST-PH connector on bottom of the board
-Cables between chip and LED's need pass through the frame
-Solders likely will need to be done with the components in there frames

Contacts:

Lighting Designer: Zachary Connel

Assistant Lighting Designer: Ailsa Smith

Production Electrician: Darius Evans

Assistant Production Electrician: Bianca Akoa

Noah Wrafter
Practical Consultant
wrafterlx.com
nwrafter@bu.edu +1(845)554-2742

NWLX
Light for a Life of Entertainment

BU School Of Theatre

Emilia

Joan Edgar Booth Theatre
820 Commonwealth Avenue, Brookline MA, 02215

WIRING

Scale: 1:0.5

Drafted By:
Noah Wrafter

Plate: 3 / 5

4/4/2025

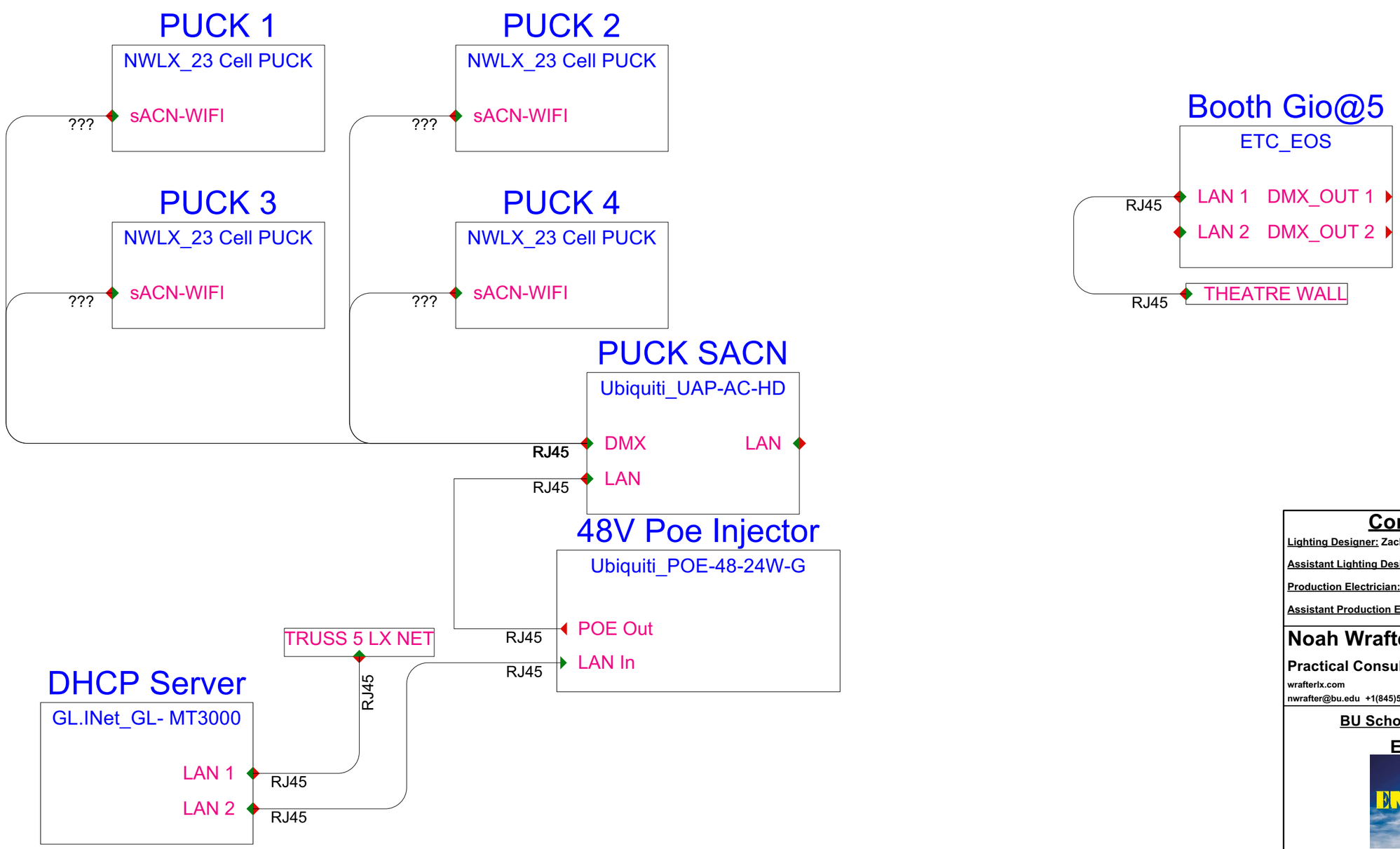

Contacts:

Lighting Designer: Zachary Connel

Assistant Lighting Designer: Ailsa Smith

Production Electrician: Darius Evans

Assistant Production Electrician: Bianca Akoa

Noah Wrafter
Practical Consultant
wrafterlx.com
nwrafter@bu.edu +1(845)554-2742

NWLX
Light for a Life of Entertainment

BU School Of Theatre

Emilia

Joan Edgar Booth Theatre
820 Commonwealth Avenue, Brookline MA, 02215

Network Diagram

Scale: 1:0.5

Plate: 4 / 5

Drafted By:
Noah Wrafter

4/4/2025

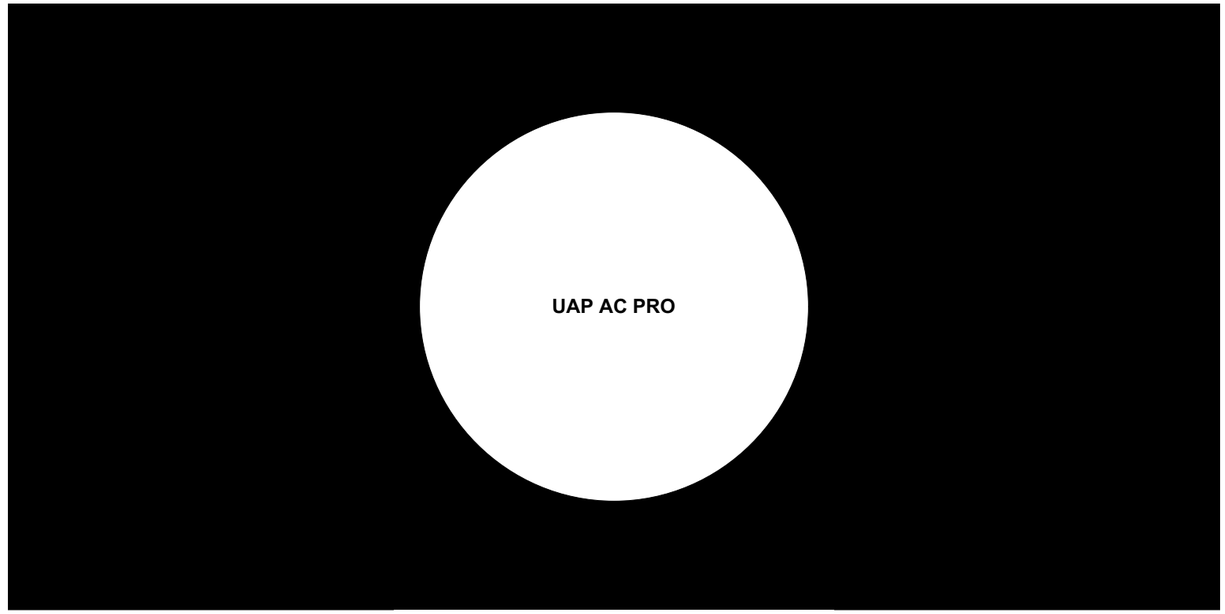

BOTTOM

TOP

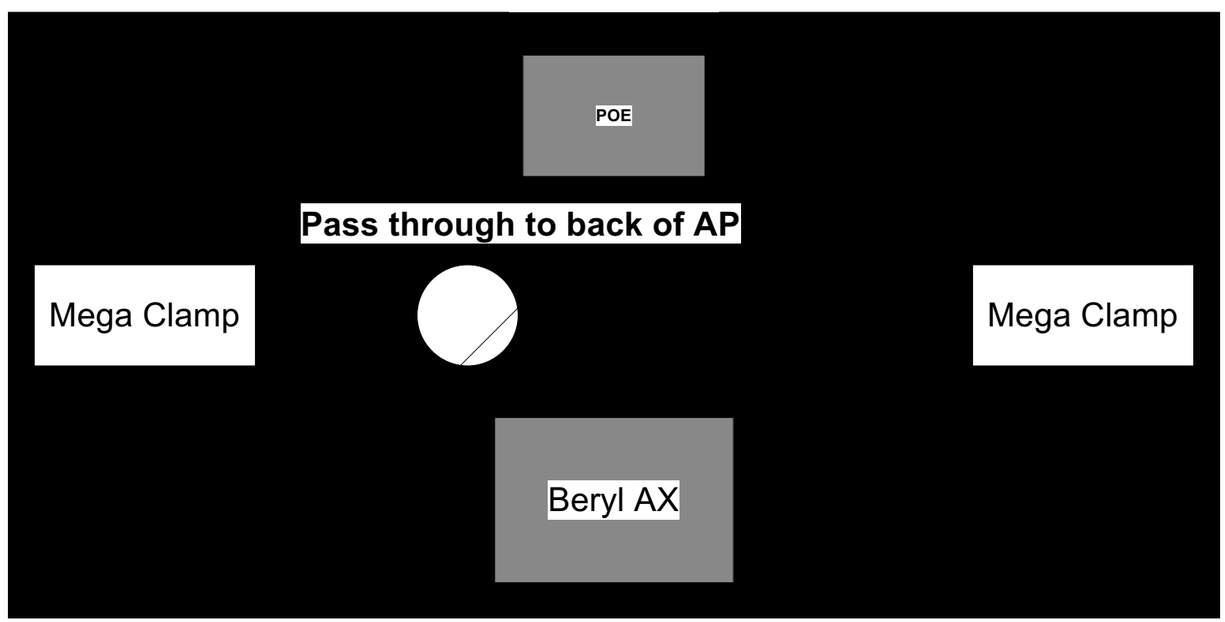

Contacts:

Lighting Designer: Zachary Connel

Assistant Lighting Designer: Ailsa Smith

Production Electrician: Darius Evans

Assistant Production Electrician: Bianca Akoa

Noah Wrafter
Practical Consultant
wrafterlx.com
nwrafter@bu.edu +1(845)554-2742

BU School Of Theatre

Emilia

Joan Edgar Booth Theatre
820 Commonwealth Avenue, Brookline, MA, 02215

sACN Distro Board Layout

Scale: 1:0.5

Plate: 5 / 5

Drafted By:
Noah Wrafter

4/4/2025

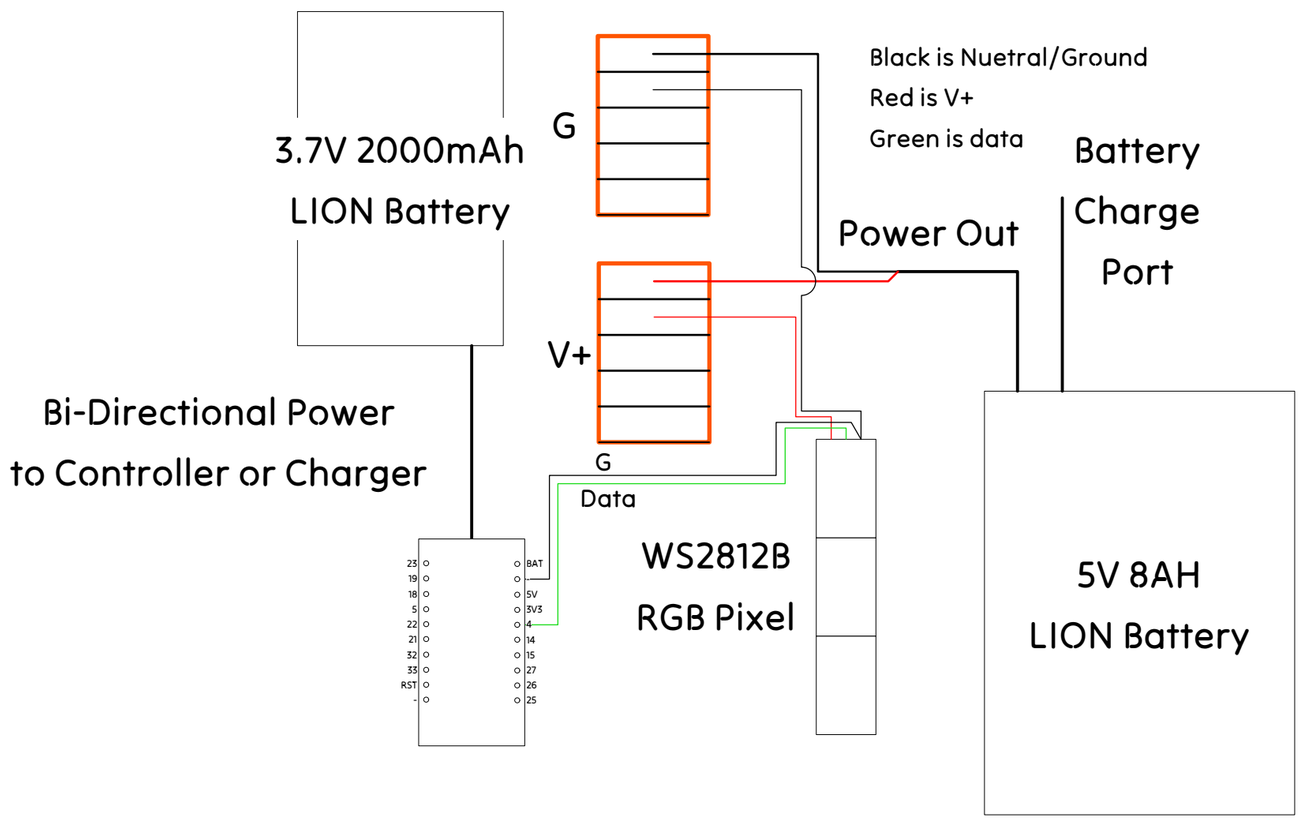

Contacts:

Lighting Designer: Noah Wrafter

Assistant Lighting Designer: Noah Wrafter

Production Electrician: Noah Wrafter

Assistant Production Electrician: Noah Wrafter

Noah Wrafter
Practical Consultant
wrafterlx.com
nwrafter@bu.edu +1(845)554-2742

NWLX
Light for a Life of Entertainment

BU School Of Theatre

Thesis

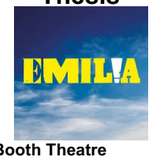

Joan Edgar Booth Theatre
820 Commonwealth Avenue, Brookline MA, 02215

Costume Diagram

Scale: 1:1

Plate: 1 / 2

Drafted By:
Noah Wrafter

5/5/2025

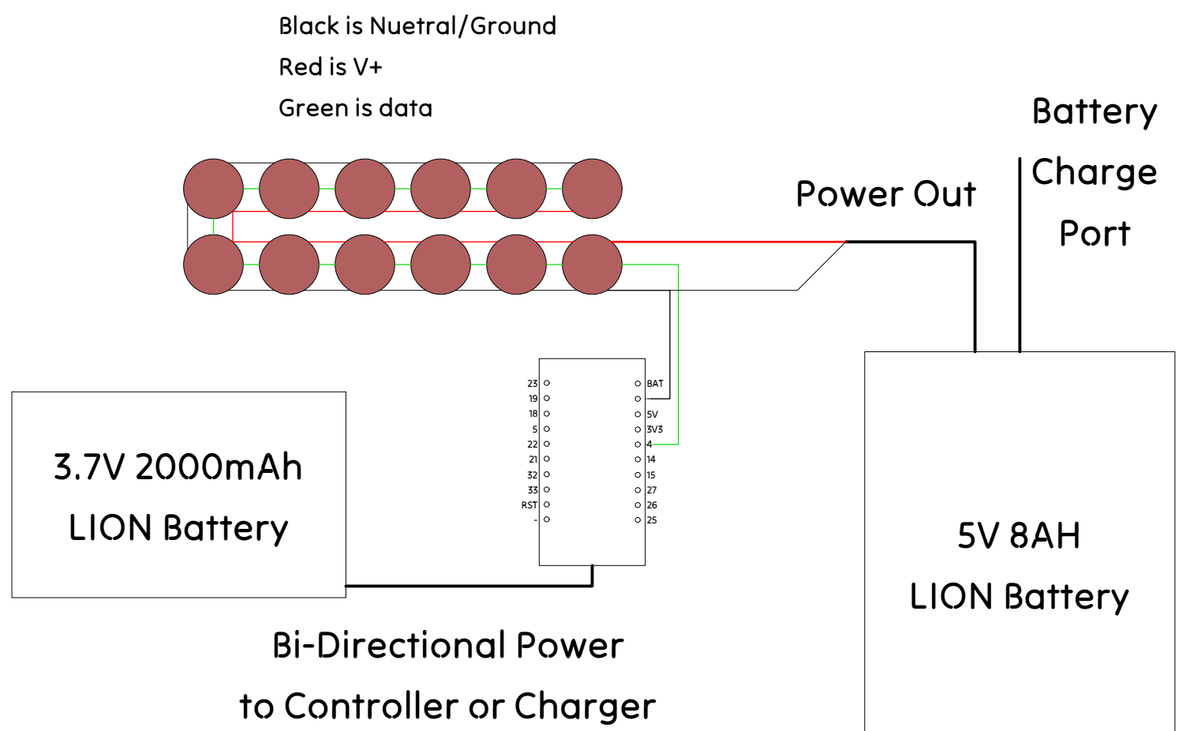

Contacts:

Lighting Designer: Noah Wrafter

Assistant Lighting Designer: Noah Wrafter

Production Electrician: Noah Wrafter

Assistant Production Electrician: Noah Wrafter

Noah Wrafter

Practical Consultant

NWLX

Light for a Life of Entertainment

wrafterlx.com

nwrafter@bu.edu +1(845)554-2742

BU School Of Theatre

Thesis

Joan Edgar Booth Theatre

820 Commonwealth Avenue, Brookline MA, 02215

Sleeve Diagram

Scale: 1:1

Plate: 2 / 2

Drafted By:
Noah Wrafter

5/5/2025

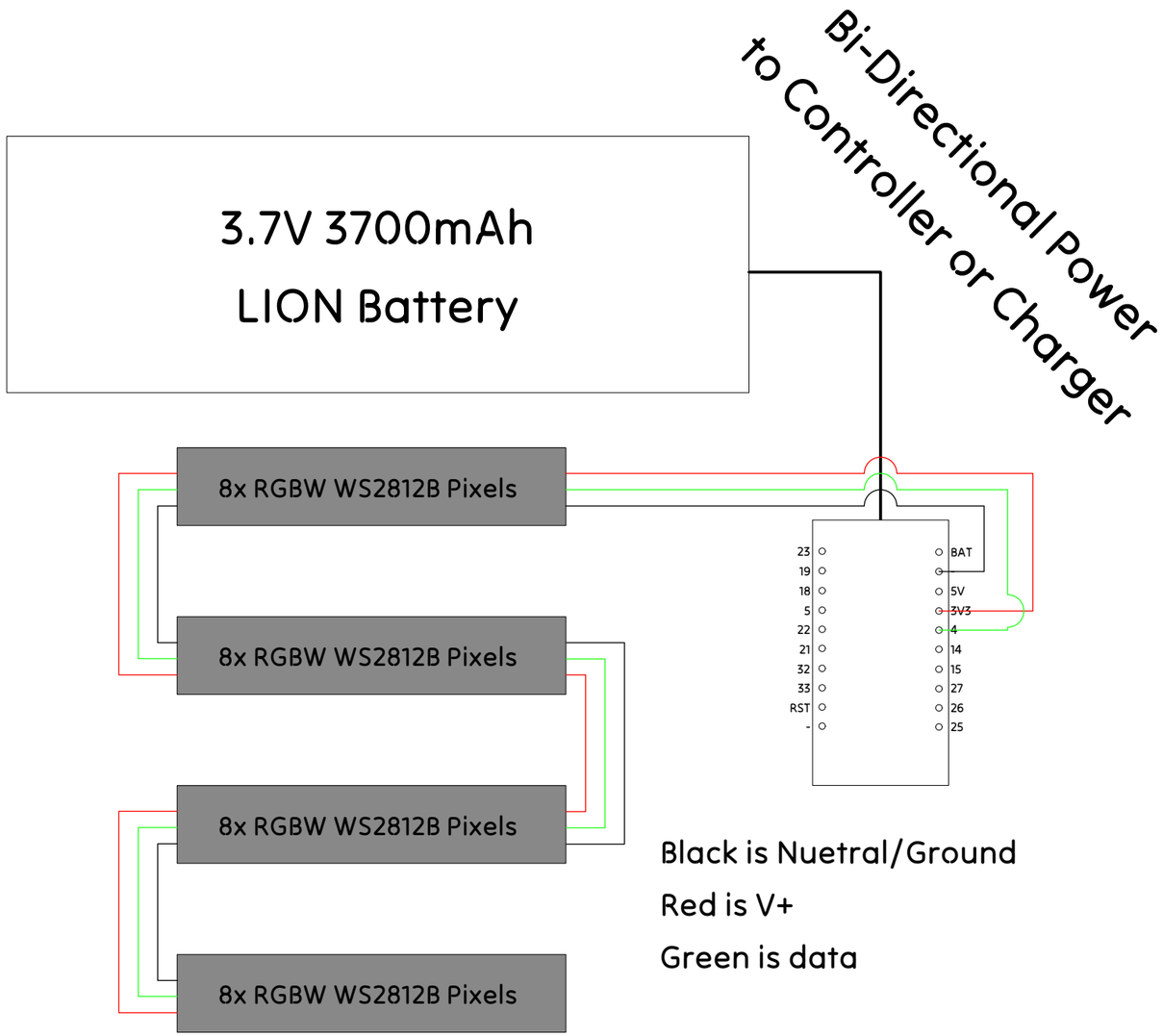

Contacts:

Lighting Designer: Noah Wrafter

Assistant Lighting Designer: Noah Wrafter

Production Electrician: Noah Wrafter

Assistant Production Electrician: Noah Wrafter

Noah Wrafter
Practical Consultant
wrafterlx.com
nwrafter@bu.edu +1(845)554-2742

NWLX
Light for a Life of Entertainment

BU School Of Theatre

Thesis

Joan Edgar Booth Theatre
820 Commonwealth Avenue, Brookline MA, 02215

Lantern Diagram

Scale: 1:0.75

Plate: 1 / 1

Drafted By:
Noah Wrafter

4/22/2025

Thesis Data!

Decoder #	In V@ Decoder	Percent	C1	C2	C3	C4	Tape #?	Turns on?				Notes
Decoder 1	12.19	0%	0.034	0.035	0.038	0.030	No Tape	☐	☐	☐	☐	
Decoder 1	12.19	1%	0.036	0.036	0.040	0.031	No Tape	☐	☐	☐	☐	
Decoder 1	12.19	2%	0.040	0.039	0.043	0.032	No Tape	☐	☐	☐	☐	
Decoder 1	12.19	3%	0.040	0.040	0.043	0.033	No Tape	☐	☐	☐	☐	
Decoder 1	12.19	4%	0.040	0.040	0.044	0.033	No Tape	☐	☐	☐	☐	
Decoder 1	12.19	5%	0.042	0.041	0.044	0.033	No Tape	☐	☐	☐	☐	
Decoder 1	12.19	6%	0.042	0.041	0.045	0.034	No Tape	☐	☐	☐	☐	
Decoder 1	12.19	7%	0.042	0.041	0.045	0.033	No Tape	☐	☐	☐	☐	
Decoder 1	12.19	8%	0.042	0.042	0.045	0.033	No Tape	☐	☐	☐	☐	
Decoder 1	12.19	9%	0.043	0.043	0.046	0.035	No Tape	☐	☐	☐	☐	
Decoder 1	12.19	10%	0.046	0.048	0.046	0.038	No Tape	☐	☐	☐	☐	
Decoder 1	12.19	11%	0.051	0.048	0.052	0.038	No Tape	☐	☐	☐	☐	
Decoder 1	12.19	12%	0.079	0.063	0.073	0.050	No Tape	☐	☐	☐	☐	
Decoder 1	12.19	13%	0.133	0.094	0.109	0.068	No Tape	☐	☐	☐	☐	
Decoder 1	12.19	14%	0.396	0.234	0.290	0.166	No Tape	☐	☐	☐	☐	
Decoder 1	12.19	15%	0.856	0.854	0.628	0.345	No Tape	☐	☐	☐	☐	
Decoder 1	12.19	25%	1.482	1.446	1.465	1.436	No Tape	☐	☐	☐	☐	
Decoder 1	12.19	50%	4.422	4.144	4.291	4.097	No Tape	☐	☐	☐	☐	
Decoder 1	12.19	75%	11.950	11.920	11.940	11.890	No Tape	☐	☐	☐	☐	
Decoder 1	12.19	100%	12.190	12.190	12.190	12.190	No Tape	☐	☐	☐	☐	
Decoder 1	12.19	0%	0.306	0.786	0.102	0.052	Tape 1	☐	☐	☐	☐	
Decoder 1	12.19	1%	0.281	0.593	0.100	0.050	Tape 1	☐	☐	☐	☐	
Decoder 1	12.19	2%	0.297	0.683	0.980	0.050	Tape 1	☐	☐	☐	☐	
Decoder 1	12.19	3%	0.048	0.050	0.050	0.037	Tape 1	☐	☐	☐	☐	
Decoder 1	12.19	4%	0.050	0.053	0.050	0.037	Tape 1	☐	☐	☐	☐	
Decoder 1	12.19	5%	0.050	0.056	0.050	0.037	Tape 1	☐	☐	☐	☐	
Decoder 1	12.19	6%	0.047	0. 054	0.050	0.038	Tape 1	☐	☐	☐	☐	
Decoder 1	12.19	7%	0.048	0.054	0.049	0.038	Tape 1	☐	☐	☐	☐	
Decoder 1	12.19	8%	0.049	0.054	0.048	0.039	Tape 1	☐	☐	☐	☐	
Decoder 1	12.19	9%	0.048	0.055	0.050	0.037	Tape 1	☐	☐	☐	☐	
Decoder 1	12.19	10%	0.051	0.056	0.051	0.038	Tape 1	☐	☐	☐	☐	
Decoder 1	12.19	11%	0.054	0.057	0.054	0.039	Tape 1	☐	☐	☐	☐	
Decoder 1	12.19	12%	0.070	0.067	0.066	0.046	Tape 1	☐	☐	☐	☐	
Decoder 1	12.19	13%	0.097	0.077	0.086	0.058	Tape 1	☐	☐	☐	☐	
Decoder 1	12.19	14%	0.243	0.160	0.190	0.113	Tape 1	☐	☐	☐	☐	
Decoder 1	12.19	15%	0.515	0.316	0.388	0.219	Tape 1	☐	☐	☐	☐	
Decoder 1	12.19	25%	1.624	1.564	1.593	1.575	Tape 1	☑	☑	☑	☑	
Decoder 1	12.19	30%	1.888	1.779	1.832	1.782	Tape 1	☑	☑	☑	☑	
Decoder 1	12.19	50%	3.950	3.435	4.038	3.895	Tape 1	☑	☑	☑	☑	
Decoder 1	12.15	75%	10.600	9.960	10.660	10.220	Tape 1	☑	☑	☑	☑	
Decoder 1	12.13	100%	12.100	12.100	12.100	12.100	Tape 1	☑	☑	☑	☑	
Decoder 1	24.43	0%	0.121	0.121	0.139	X	Tape 2	☐	☐	☐	X	
Decoder 1		1%	0.121	0.121	0.135	X	Tape 2	☐	☐	☐	X	
Decoder 1		5%	0.124	0.124	0.133	X	Tape 2	☐	☐	☐	X	
Decoder 1		10%	0.137	0.129	0.134	X	Tape 2	☐	☐	☐	X	
Decoder 1		15%	1.090	1.006	1.062	X	Tape 2	☐	☐	☐	X	
Decoder 1		25%	1.582	1.521	1.564	X	Tape 2	☑	☑	☑	X	
Decoder 1		30%	2.071	1.925	2.000	X	Tape 2	☑	☑	☑	X	
Decoder 1		37%	3.225	2.911	3.060	X	Tape 2	☑	☑	☑	X	
Decoder 1		50%	6.980	6.157	6.780	X	Tape 2	☑	☑	☑	X	

Decoder #	In V@ Decoder	Percent	C1	C2	C3	C4	Tape #?	Turns on?				Notes
Decoder 1		75%	23.850	23.670	23.810	X	Tape 2	☑	☑	☑	X	
Decoder 1	24.42	100%	24.410	24.410	24.410	X	Tape 2	☑	☑	☑	X	
Decoder 1	12.19	0%	0.057	0.074	0.425	X	Tape 3-5	☐	☐	☐	X	
Decoder 1	12.19	1%	0.055	0.055	0.448	X	Tape 3-5	☐	☐	☐	X	
Decoder 1	12.19	2%	0.055	0.064	0.422	X	Tape 3-5	☐	☐	☐	X	
Decoder 1	12.19	3%	0.055	0.064	0.426	X	Tape 3-5	☐	☐	☐	X	
Decoder 1	12.19	4%	0.055	0.076	0.446	X	Tape 3-5	☐	☐	☐	X	
Decoder 1	12.19	5%	0.055	0.067	0.429	X	Tape 3-5	☐	☐	☐	X	
Decoder 1	12.19	6%	0.056	0.066	0.455	X	Tape 3-5	☐	☐	☐	X	
Decoder 1	12.19	7%	0.056	0.067	0.456	X	Tape 3-5	☐	☐	☐	X	
Decoder 1	12.19	8%	0.060	0.065	0.451	X	Tape 3-5	☐	☐	☐	X	
Decoder 1	12.19	9%	0.057	0.070	0.436	X	Tape 3-5	☐	☐	☐	X	
Decoder 1	12.19	10%	0.059	0.070	0.440	X	Tape 3-5	☐	☐	☐	X	
Decoder 1	12.19	11%	0.061	0.070	0.433	X	Tape 3-5	☐	☐	☐	X	
Decoder 1	12.19	12%	0.077	0.080	0.450	X	Tape 3-5	☐	☐	☐	X	
Decoder 1	12.19	13%	0.105	0.096	0.105	X	Tape 3-5	☐	☐	☐	X	
Decoder 1	12.19	14%	0.235	0.175	0.560	X	Tape 3-5	☐	☐	☐	X	
Decoder 1	12.19	15%	0.461	0.312	0.780	X	Tape 3-5	☐	☐	☐	X	
Decoder 1	12.19	25%	1.811	1.651	1.638	X	Tape 3-5	☐	☐	☐	X	
Decoder 1	12.19	30%	2.245	1.893	1.882	X	Tape 3-5	☐	☐	☐	X	
Decoder 1	12.19	31%	2.319	1.944	1.928	X	Tape 3-5	☐	☐	☑	X	Tape 5 On
Decoder 1	12.19	37%	3.016	2.463	2.304	X	Tape 3-5	☐	☑	☑	X	Tape 4 On
Decoder 1	12.19	44%	4.025	3.218	2.839	X	Tape 3-5	☑	☑	☑	X	Tape 3 On
Decoder 1	12.19	50%	5.108	3.949	3.455	X	Tape 3-5	☑	☑	☑	X	
Decoder 1	12.11	75%	10.810	9.350	8.440	X	Tape 3-5	☑	☑	☑	X	
Decoder 1	11.99	100%	11.920	11.920	11.930	X	Tape 3-5	☑	☑	☑	X	
Decoder 1	24.46	0%	0.552	0.140	0.100	0.038	Tape 6	☐	☐	☐	☐	
Decoder 1	24.46	1%	0.075	0.062	0.060	0.042	Tape 6	☐	☐	☐	☐	
Decoder 1	24.46	2%	0.076	0.062	0.063	0.043	Tape 6	☐	☐	☐	☐	
Decoder 1	24.46	3%	0.079	0.065	0.063	0.044	Tape 6	☐	☐	☐	☐	
Decoder 1	24.46	4%	0.079	0.065	0.065	0.045	Tape 6	☐	☐	☐	☐	
Decoder 1	24.46	5%	0.081	0.068	0.068	0.047	Tape 6	☐	☐	☐	☐	
Decoder 1	24.46	10%	0.091	0.075	0.069	0.047	Tape 6	☐	☐	☐	☐	
Decoder 1	24.46	15%	1.142	0.587	0.669	0.361	Tape 6	☐	☐	☐	☐	
Decoder 1	24.46	25%	1.753	1.662	1.681	1.536	Tape 6	☐	☐	☐	☐	
Decoder 1	24.46	30%	2.226	2.045	2.085	1.774	Tape 6	☐	☐	☐	☐	
Decoder 1	24.46	31%	2.331	2.138	2.182	1.865	Tape 6	☑	☐	☐	☐	
Decoder 1	24.46	38%	3.427	3.267	3.371	2.945	Tape 6	☑	☑	☐	☐	
Decoder 1	24.46	40%	3.793	3.682	3.826	3.386	Tape 6	☑	☑	☑	☐	
Decoder 1	24.46	42%	4.197	4.116	4.307	3.883	Tape 6	☑	☑	☑	☑	
Decoder 1	24.46	50%	6.176	6.136	6.513	6.100	Tape 6	☑	☑	☑	☑	
Decoder 1	24.40	75%	22.790	21.990	22.610	22.290	Tape 6	☑	☑	☑	☑	
Decoder 1	24.39	100%	24.360	24.360	24.360	24.360	Tape 6	☑	☑	☑	☑	
Decoder 1	12.01	0%	0.036	X	X	X	Tape 7	☐	X	X	X	
Decoder 1	12.01	1%	0.040	X	X	X	Tape 7	☐	X	X	X	
Decoder 1	12.01	5%	0.040	X	X	X	Tape 7	☐	X	X	X	
Decoder 1	12.01	10%	0.040	X	X	X	Tape 7	☐	X	X	X	
Decoder 1	12.01	15%	0.429	X	X	X	Tape 7	☐	X	X	X	
Decoder 1	12.01	25%	1.634	X	X	X	Tape 7	☐	X	X	X	
Decoder 1	12.01	35%	2.316	X	X	X	Tape 7	☑	X	X	X	

Decoder #	In V@ Decoder	Percent	C1	C2	C3	C4	Tape #?	Turns on?				Notes
Decoder 1	12.01	50%	4.049	X	X	X	Tape 7	☑	X	X	X	
Decoder 1	11.99	75%	10.120	X	X	X	Tape 7	☑	X	X	X	
Decoder 1	11.98	100%	11.950	X	X	X	Tape 7	☑	X	X	X	
Decoder 1	12.01	0%	0.041	0.043	X	X	Tape 8	☐	☐	X	X	
Decoder 1	12.01	1%	0.042	0.043	X	X	Tape 8	☐	☐	X	X	
Decoder 1	12.01	5%	0.041	0.044	X	X	Tape 8	☐	☐	X	X	
Decoder 1	12.01	10%	0.045	0.046	X	X	Tape 8	☐	☐	X	X	
Decoder 1	12.01	15%	0.633	0.339	X	X	Tape 8	☐	☐	X	X	
Decoder 1	12.01	25%	1.546	1.537	X	X	Tape 8	☐	☐	X	X	
Decoder 1	12.01	36%	2.333	2.227	X	X	Tape 8	☑	☑	X	X	
Decoder 1	12.01	50%	4.126	3.926	X	X	Tape 8	☑	☑	X	X	
Decoder 1	12.00	75%	11.130	10.960	X	X	Tape 8	☑	☑	X	X	
Decoder 1	11.99	100%	11.990	11.990	X	X	Tape 8	☑	☑	X	X	
Decoder 1	24.43	0%	0.094	0.084	X	X	Tape 9	☐	☐	X	X	
Decoder 1	24.43	1%	0.094	0.084	X	X	Tape 9	☐	☐	X	X	
Decoder 1	24.43	5%	0.090	0.080	X	X	Tape 9	☐	☐	X	X	
Decoder 1	24.43	10%	0.096	0.095	X	X	Tape 9	☐	☐	X	X	
Decoder 1	24.43	15%	1.136	0.563	X	X	Tape 9	☐	☐	X	X	
Decoder 1	24.43	25%	1.787	1.744	X	X	Tape 9	☐	☐	X	X	
Decoder 1	24.43	38%	3.862	3.595	X	X	Tape 9	☑	☐	X	X	
Decoder 1	24.43	40%	4.328	4.033	X	X	Tape 9	☑	☑	X	X	
Decoder 1	24.43	50%	6.700	6.340	X	X	Tape 9	☑	☑	X	X	
Decoder 1	24.37	75%	21.000	21.300	X	X	Tape 9	☑	☑	X	X	
Decoder 1	24.31	100%	24.230	24.230	X	X	Tape 9	☑	☑	X	X	
Decoder 1	24.43	0%	0.548	0.267	0.144	0.077	Tape 10	☐	☐	☐	☐	
Decoder 1	24.43	1%	0.545	0.265	0.140	0.073	Tape 10	☐	☐	☐	☐	
Decoder 1	24.43	5%	0.544	0.262	0.136	0.073	Tape 10	☐	☐	☐	☐	
Decoder 1	24.43	10%	0.552	0.265	0.139	0.078	Tape 10	☐	☐	☐	☐	
Decoder 1	24.43	15%	1.276	0.873	0.849	0.430	Tape 10	☐	☐	☐	☐	
Decoder 1	24.43	25%	1.729	1.684	1.673	1.666	Tape 10	☐	☐	☐	☐	
Decoder 1	24.42	31%	2.398	2.279	2.328	2.258	Tape 10	☑	☐	☐	☐	
Decoder 1	24.42	36%	3.151	3.002	3.065	2.897	Tape 10	☑	☑	☐	☐	
Decoder 1	24.42	38%	3.492	3.400	3.485	3.286	Tape 10	☑	☑	☑	☐	
Decoder 1	24.42	40%	3.853	3.811	3.946	3.718	Tape 10	☑	☑	☑	☑	
Decoder 1	24.42	50%	6.190	6.222	6.595	6.290	Tape 10	☑	☑	☑	☑	
Decoder 1	24.35	75%	22.750	22.400	22.680	20.960	Tape 10	☑	☑	☑	☑	
Decoder 1	24.30	100%	24.260	24.260	24.260	24.230	Tape 10	☑	☑	☑	☑	
Decoder 1	24.43	0%	0.579	0.280	0.141	0.071	Tape 11	☐	☐	☐	☐	
Decoder 1	24.43	1%	0.578	0.278	0.140	0.071	Tape 11	☐	☐	☐	☐	
Decoder 1	24.43	5%	0.577	0.273	0.138	0.068	Tape 11	☐	☐	☐	☐	
Decoder 1	24.43	10%	0.584	0.280	0.142	0.070	Tape 11	☐	☐	☐	☐	
Decoder 1	24.43	15%	1.277	0.941	0.920	0.467	Tape 11	☐	☐	☐	☐	
Decoder 1	24.43	25%	1.724	1.681	1.672	1.665	Tape 11	☐	☐	☐	☐	
Decoder 1	24.42	31%	2.370	2.238	2.263	2.182	Tape 11	☑	☐	☐	☐	
Decoder 1	24.42	37%	3.293	3.194	3.279	3.099	Tape 11	☑	☑	☐	☐	
Decoder 1	24.42	39%	3.632	3.589	3.698	3.487	Tape 11	☑	☑	☑	☐	
Decoder 1	24.42	40%	3.850	3.828	3.970	3.752	Tape 11	☑	☑	☑	☑	
Decoder 1	24.42	50%	6.240	6.200	6.565	6.250	Tape 11	☑	☑	☑	☑	
Decoder 1	24.33	75%	22.670	21.830	22.660	19.950	Tape 11	☑	☑	☑	☑	
Decoder 1	24.29	100%	24.250	24.250	24.250	24.220	Tape 11	☑	☑	☑	☑	

Decoder #	In V@ Decoder	Percent	C1	C2	C3	C4	Tape #?	Turns on?				Notes
Decoder 1	24.43	0%	1.411	0.716	0.170	1.414	Tape12	☐	☐	☐	☐	
Decoder 1	24.43	1%	1.410	0.713	0.170	1.413	Tape12	☐	☐	☐	☐	
Decoder 1	24.43	5%	1.407	0.714	0.170	1.410	Tape12	☐	☐	☐	☐	
Decoder 1	24.43	10%	1.398	0.721	0.176	1.402	Tape12	☐	☐	☐	☐	
Decoder 1	24.43	15%	1.406	1.205	0.853	1.398	Tape12	☐	☐	☐	☐	
Decoder 1	24.43	25%	1.759	1.738	1.735	1.644	Tape12	☐	☐	☐	☐	
Decoder 1	24.42	30%	2.252	2.179	2.194	1.964	Tape12	☑	☐	☐	☐	
Decoder 1	24.42	33%	2.653	2.548	2.582	2.287	Tape12	☑	☐	☐	☑	
Decoder 1	24.42	36%	3.130	3.082	3.150	2.748	Tape12	☑	☑	☐	☑	
Decoder 1	24.42	39%	3.575	3.648	3.755	3.138	Tape12	☑	☑	☑	☑	
Decoder 1	24.42	50%	6.142	6.302	6.720	5.492	Tape12	☑	☑	☑	☑	
Decoder 1	24.28	75%	21.060	19.420	20.310	17.950	Tape12	☑	☑	☑	☑	
Decoder 1	24.21	100%	24.130	24.130	24.140	24.130	Tape12	☑	☑	☑	☑	
Decoder 2	12.19	0%	0.003	0.004	0.010	0.016	No Tape	☐	☐	☐	☐	
Decoder 2	12.19	1%	11.870	11.940	11.880	11.900	No Tape	☐	☐	☐	☐	
Decoder 2	12.19	10%	11.960	12.020	11.980	11.990	No Tape	☐	☐	☐	☐	
Decoder 2	12.19	25%	12.080	12.120	12.100	12.100	No Tape	☐	☐	☐	☐	
Decoder 2	12.19	50%	12.200	12.220	12.220	12.210	No Tape	☐	☐	☐	☐	
Decoder 2	12.19	75%	12.240	12.240	12.240	12.240	No Tape	☐	☐	☐	☐	
Decoder 2	12.19	100%	12.190	12.190	12.190	12.190	No Tape	☐	☐	☐	☐	
Decoder 2	12.19	0%	0.287	0.846	0.075	0.040	Tape 1	☐	☐	☐	☐	
Decoder 2	12.19	1%	4.330	2.411	4.802	6.600	Tape 1	☑	☑	☑	☑	
Decoder 2	12.19	5%	4.620	2.904	5.124	6.690	Tape 1	☑	☑	☑	☑	
Decoder 2	12.19	10%	5.185	3.517	5.616	7.120	Tape 1	☑	☑	☑	☑	
Decoder 2	12.19	25%	6.300	4.936	6.660	7.920	Tape 1	☑	☑	☑	☑	
Decoder 2	12.19	50%	8.250	7.340	8.500	9.350	Tape 1	☑	☑	☑	☑	
Decoder 2	12.15	75%	10.160	9.690	10.280	10.720	Tape 1	☑	☑	☑	☑	
Decoder 2	12.13	100%	12.090	12.090	12.090	12.090	Tape 1	☑	☑	☑	☑	
Decoder 2	24.43	0%	0.010	0.011	0.021	X	Tape 2	☐	☐	☐	X	
Decoder 2	24.43	1%	10.060	7.290	11.900	X	Tape 2	☑	☑	☑	X	
Decoder 2	24.43	5%	10.790	8.110	12.560	X	Tape 2	☑	☑	☑	X	
Decoder 2	24.43	10%	11.670	9.120	13.350	X	Tape 2	☑	☑	☑	X	
Decoder 2	24.43	15%	12.460	10.020	14.050	X	Tape 2	☑	☑	☑	X	
Decoder 2	24.43	25%	14.080	11.890	15.480	X	Tape 2	☑	☑	☑	X	
Decoder 2	24.43	30%	14.840	12.770	16.160	X	Tape 2	☑	☑	☑	X	
Decoder 2	24.42	50%	17.750	16.220	18.710	X	Tape 2	☑	☑	☑	X	
Decoder 2	24.42	75%	21.140	20.350	21.640	X	Tape 2	☑	☑	☑	X	
Decoder 2	24.42	100%	24.420	24.420	24.420	X	Tape 2	☑	☑	☑	X	
Decoder 2	12.19	0%	0.027	0.021	0.364	X	Tape 3-5	☐	☐	☐	X	
Decoder 2	12.18	1%	7.750	6.620	0.908	X	Tape 3-5	☑	☑	☑	X	Tape 3-5 On
Decoder 2	12.18	5%	7.970	6.840	1.550	X	Tape 3-5	☑	☑	☑	X	
Decoder 2	12.17	10%	8.270	7.120	2.218	X	Tape 3-5	☑	☑	☑	X	
Decoder 2	12.15	25%	8.690	7.930	3.784	X	Tape 3-5	☑	☑	☑	X	
Decoder 2	12.14	30%	8.910	8.210	4.355	X	Tape 3-5	☑	☑	☑	X	
Decoder 2	12.10	50%	9.770	9.300	6.518	X	Tape 3-5	☑	☑	☑	X	
Decoder 2	12.05	75%	10.830	10.620	9.180	X	Tape 3-5	☑	☑	☑	X	
Decoder 2	12.00	100%	11.930	11.930	11.930	X	Tape 3-5	☑	☑	☑	X	
Decoder 2	24.46	0%	0.523	0.251	0.176	0.103	Tape 6	☐	☐	☐	☐	
Decoder 2	24.46	1%	2.333	8.000	10.630	13.710	Tape 6	☑	☑	☑	☑	
Decoder 2	24.46	5%	3.358	8.770	11.260	14.160	Tape 6	☑	☑	☑	☑	

Thesis Data!

Decoder #	In V@ Decoder	Percent	C1	C2	C3	C4	Tape #?	Turns on?				Notes
Decoder 2	24.45	10%	4.548	9.650	12.000	14.730	Tape 6	☑	☑	☑	☑	
Decoder 2	24.45	15%	5.585	10.430	12.650	15.240	Tape 6	☑	☑	☑	☑	
Decoder 2	24.44	25%	7.860	12.120	14.080	16.350	Tape 6	☑	☑	☑	☑	
Decoder 2	24.42	50%	13.390	16.230	17.540	19.070	Tape 6	☑	☑	☑	☑	
Decoder 2	24.41	75%	18.820	20.260	20.930	21.720	Tape 6	☑	☑	☑	☑	
Decoder 2	24.39	100%	24.350	24.350	24.350	24.350	Tape 6	☑	☑	☑	☑	
Decoder 2		N/A					Tape 7	☐	X	X	X	
Decoder 2		N/A					Tape 8	☐	☐	X	X	
Decoder 2		N/A					Tape 9	☐	☐	☐	☐	
Decoder 2		N/A					Tape 10	☐	☐	☐	☐	
Decoder 2		N/A					Tape 11	☐	☐	☐	☐	
Decoder 2		N/A					Tape12	☐	☐	☐	☐	
Decoder 3	12.19	0%	0.036	0.045	0.054	0.047	No Tape	☐	☐	☐	☐	
Decoder 3	12.19	1%	11.540	11.460	11.480	11.480	No Tape	☐	☐	☐	☐	
Decoder 3	12.19	5%	11.620	11.550	11.560	11.560	No Tape	☐	☐	☐	☐	
Decoder 3	12.19	10%	11.720	11.640	11.650	11.650	No Tape	☐	☐	☐	☐	
Decoder 3	12.19	15%	11.770	11.720	11.730	11.720	No Tape	☐	☐	☐	☐	
Decoder 3	12.19	25%	11.991	11.870	11.870	11.870	No Tape	☐	☐	☐	☐	
Decoder 3	12.19	50%	12.130	12.120	12.120	12.110	No Tape	☐	☐	☐	☐	
Decoder 3	12.19	75%	12.220	12.220	12.220	12.220	No Tape	☐	☐	☐	☐	
Decoder 3	12.19	100%	12.190	12.190	12.190	12.190	No Tape	☐	☐	☐	☐	
Decoder 3	12.19	0%	0.337	0.875	0.131	0.075	Tape 1	☐	☐	☐	☐	
Decoder 3	12.19	1%	5.472	2.575	4.765	6.591	Tape 1	☑	☑	☑	☑	
Decoder 3	12.19	5%	5.736	3.048	5.111	6.790	Tape 1	☑	☑	☑	☑	
Decoder 3	12.19	10%	6.068	3.567	5.519	7.070	Tape 1	☑	☑	☑	☑	
Decoder 3	12.19	15%	6.382	4.030	4.028	7.320	Tape 1	☑	☑	☑	☑	
Decoder 3	12.19	25%	7.030	4.962	6.572	7.850	Tape 1	☑	☑	☑	☑	
Decoder 3	12.19	50%	8.680	7.280	8.360	9.210	Tape 1	☑	☑	☑	☑	
Decoder 3	12.19	75%	10.260	9.540	10.080	10.530	Tape 1	☑	☑	☑	☑	
Decoder 3	12.13	100%	11.880	11.870	11.870	11.870	Tape 1	☑	☑	☑	☑	
Decoder 3	24.44	0%	0.109	0.162	0.177	X	Tape 2	☐	☐	☐	X	
Decoder 3	24.44	1%	9.430	6.780	11.340	X	Tape 2	☑	☑	☑	X	
Decoder 3	24.44	5%	10.250	7.690	12.080	X	Tape 2	☑	☑	☑	X	
Decoder 3	24.44	10%	11.230	8.770	12.940	X	Tape 2	☑	☑	☑	X	
Decoder 3	24.44	15%	12.070	9.720	13.700	X	Tape 2	☑	☑	☑	X	
Decoder 3	24.44	25%	13.820	11.700	15.230	X	Tape 2	☑	☑	☑	X	
Decoder 3	24.44	30%	14.640	12.640	15.970	X	Tape 2	☑	☑	☑	X	
Decoder 3	24.44	50%	17.650	16.130	18.610	X	Tape 2	☑	☑	☑	X	
Decoder 3	24.44	75%	21.280	20.280	21.590	X	Tape 2	☑	☑	☑	X	
Decoder 3	24.43	100%	24.380	24.360	24.370	X	Tape 2	☑	☑	☑	X	
Decoder 3	12.19	0%	0.057	0.057	0.420	X	Tape 3-5	☐	☐	☐	X	
Decoder 3	12.19	1%	8.210	6.600	2.050	X	Tape 3-5	☑	☑	☑	X	Tape 3-5 On
Decoder 3	12.19	5%	8.400	6.820	2.573	X	Tape 3-5	☑	☑	☑	X	
Decoder 3	12.18	10%	8.650	7.090	3.125	X	Tape 3-5	☑	☑	☑	X	
Decoder 3	12.17	15%	8.800	7.340	3.604	X	Tape 3-5	☑	☑	☑	X	
Decoder 3	12.15	25%	9.030	7.880	4.645	X	Tape 3-5	☑	☑	☑	X	
Decoder 3	12.14	30%	9.220	8.160	5.142	X	Tape 3-5	☑	☑	☑	X	
Decoder 3	12.11	50%	9.950	9.220	7.050	X	Tape 3-5	☑	☑	☑	X	
Decoder 3	12.06	75%	10.850	10.520	9.390	X	Tape 3-5	☑	☑	☑	X	
Decoder 3	12.01	100%	11.770	11.800	11.800	X	Tape 3-5	☑	☑	☑	X	

Decoder #	In V@ Decoder	Percent	C1	C2	C3	C4	Tape #?	Turns on?				Notes
Decoder 3	24.48	0%	0.620	0.265	0.255	0.175	Tape 6	☐	☐	☐	☐	
Decoder 3	24.45	1%	7.970	9.710	10.040	12.290	Tape 6	☑	☑	☑	☑	
Decoder 3	24.47	5%	8.630	10.340	10.660	12.780	Tape 6	☑	☑	☑	☑	
Decoder 3	24.46	10%	9.480	11.120	11.410	13.420	Tape 6	☑	☑	☑	☑	
Decoder 3	24.46	15%	10.250	11.810	12.090	13.990	Tape 6	☑	☑	☑	☑	
Decoder 3	24.45	25%	11.910	13.290	13.530	15.210	Tape 6	☑	☑	☑	☑	
Decoder 3	24.43	50%	16.030	16.930	17.100	18.240	Tape 6	☑	☑	☑	☑	
Decoder 3	24.41	75%	20.070	20.500	20.570	21.180	Tape 6	☑	☑	☑	☑	
Decoder 3	24.39	100%	24.100	24.110	24.070	24.120	Tape 6	☑	☑	☑	☑	
Decoder 3		N/A					Tape 7	☐	X	X	X	
Decoder 3		N/A					Tape 8	☐	☐	X	X	
Decoder 3		N/A					Tape 9	☐	☐	☐	☐	
Decoder 3		N/A					Tape 10	☐	☐	☐	☐	
Decoder 3		N/A					Tape 11	☐	☐	☐	☐	
Decoder 3		N/A					Tape12	☐	☐	☐	☐	
Decoder 4	12.19	0%	0.009	0.008	0.009	X	No Tape	☐	☐	☐	X	
Decoder 4	12.19	1%	12.390	12.410	12.390	X	No Tape	☐	☐	☐	X	
Decoder 4	12.19	10%	12.410	12.390	12.410	X	No Tape	☐	☐	☐	X	
Decoder 4	12.19	50%	12.350	12.360	12.350	X	No Tape	☐	☐	☐	X	
Decoder 4		75%				X	No Tape	☐	☐	☐	X	
Decoder 4	12.19	100%	12.190	12.190	12.190	X	No Tape	☐	☐	☐	X	
Decoder 4	12.19	0%	0.070	0.880	0.305	X	Tape 1	☐	☐	☐	X	
Decoder 4	12.19	1%	5.680	2.980	5.676	X	Tape 1	☑	☑	☑	X	
Decoder 4	12.19	5%	4.030	2.035	5.327	X	Tape 1	☑	☑	☑	X	
Decoder 4	12.19	10%	4.190	2.250	5.450	X	Tape 1	☑	☑	☑	X	
Decoder 4	12.19	25%	4.898	3.170	6.040	X	Tape 1	☑	☑	☑	X	
Decoder 4	12.18	50%	6.740	5.440	7.550	X	Tape 1	☑	☑	☑	X	
Decoder 4	12.16	75%	9.110	8.360	9.540	X	Tape 1	☑	☑	☑	X	
Decoder 4	12.14	100%	12.100	12.100	12.090	X	Tape 1	☑	☑	☑	X	
Decoder 4	24.43	0%	0.022	0.028	0.028	X	Tape 2	☐	☐	☐	X	
Decoder 4	24.43	1%	11.380	8.260	13.370	X	Tape 2	☑	☑	☑	X	
Decoder 4	24.43	5%	11.510	8.420	13.480	X	Tape 2	☑	☑	☑	X	
Decoder 4	24.43	10%	11.750	8.710	13.680	X	Tape 2	☑	☑	☑	X	
Decoder 4	24.43	15%	12.050	9.080	13.940	X	Tape 2	☑	☑	☑	X	
Decoder 4	24.43	25%	12.890	10.110	14.660	X	Tape 2	☑	☑	☑	X	
Decoder 4	24.43	30%	13.390	10.720	15.080	X	Tape 2	☑	☑	☑	X	
Decoder 4	24.43	50%	15.850	13.750	17.170	X	Tape 2	☑	☑	☑	X	
Decoder 4	24.43	75%	19.740	18.570	20.470	X	Tape 2	☑	☑	☑	X	
Decoder 4	24.42	100%	24.420	24.420	24.420	X	Tape 2	☑	☑	☑	X	
Decoder 4	12.19	0%	0.068	0.045	0.332	X	Tape 3-5	☐	☐	☐	X	
Decoder 4	12.19	1%	6.910	6.770	3.373	X	Tape 3-5	☐	☑	☑	X	Tape 4 & 5On
Decoder 4	12.19	2%	6.910	6.780	1.587	X	Tape 3-5	☑	☑	☑	X	Tape 3 On
Decoder 4	12.19	5%	6.950	6.950	1.610	X	Tape 3-5	☑	☑	☑	X	
Decoder 4	12.19	10%	6.950	6.960	1.765	X	Tape 3-5	☑	☑	☑	X	
Decoder 4	12.19	15%	6.950	6.950	0.990	X	Tape 3-5	☑	☑	☑	X	
Decoder 4	12.18	25%	7.270	7.280	1.781	X	Tape 3-5	☑	☑	☑	X	
Decoder 4	12.17	30%	7.480	7.470	2.232	X	Tape 3-5	☑	☑	☑	X	
Decoder 4	12.13	50%	8.440	8.450	4.338	X	Tape 3-5	☑	☑	☑	X	
Decoder 4	12.08	75%	9.920	9.930	7.670	X	Tape 3-5	☑	☑	☑	X	

Decoder #	In V@ Decoder	Percent	C1	C2	C3	C4	Tape #?	Turns on?				Notes
Decoder 4	12.01	100%	11.890	11.900	11.890	X	Tape 3-5	☑	☑	☑	X	
Decoder 4	24.47	0%	0.600	0.135	0.103	X	Tape 6	☐	☐	☐	X	
Decoder 4	24.47	1%	8.271	11.500	12.770	X	Tape 6	☑	☑	☑	X	
Decoder 4	24.47	5%	8.390	11.500	12.920	X	Tape 6	☑	☑	☑	X	
Decoder 4	24.47	10%	8.690	11.750	13.140	X	Tape 6	☑	☑	☑	X	
Decoder 4	24.46	15%	9.050	12.040	13.390	X	Tape 6	☑	☑	☑	X	
Decoder 4	24.46	25%	10.070	12.870	14.130	X	Tape 6	☑	☑	☑	X	
Decoder 4	24.45	50%	13.690	15.770	16.720	X	Tape 6	☑	☑	☑	X	
Decoder 4	24.44	75%	18.490	19.630	20.160	X	Tape 6	☑	☑	☑	X	
Decoder 4	24.42	100%	24.380	24.380	24.380	X	Tape 6	☑	☑	☑	X	
Decoder 4		N/A					Tape 7	☐	X	X	X	
Decoder 4		N/A					Tape 8	☐	☐	X	X	
Decoder 4		N/A					Tape 9	☐	☐	☐	☐	
Decoder 4		N/A					Tape 10	☐	☐	☐	☐	
Decoder 4		N/A					Tape 11	☐	☐	☐	☐	
Decoder 4		N/A					Tape12	☐	☐	☐	☐	
Decoder 5	12.19	0%	0.011	0.009	0.006	X	No Tape	☐	☐	☐	X	
Decoder 5	12.19	1%	12.400	12.400	12.400	X	No Tape	☐	☐	☐	X	
Decoder 5	12.19	5%	12.400	12.400	12.400	X	No Tape	☐	☐	☐	X	
Decoder 5	12.19	10%	12.400	12.400	12.400	X	No Tape	☐	☐	☐	X	
Decoder 5	12.19	25%	12.390	12.390	12.390	X	No Tape	☐	☐	☐	X	
Decoder 5	12.19	50%	12.360	12.360	12.360	X	No Tape	☐	☐	☐	X	
Decoder 5	12.19	75%	12.300	12.300	12.300	X	No Tape	☐	☐	☐	X	
Decoder 5	12.19	100%	12.190	12.190	12.190	X	No Tape	☐	☐	☐	X	
Decoder 5	12.19	0%	0.330	0.945	0.090	X	Tape 1	☐	☐	☐	X	
Decoder 5	12.19	1%	5.613	2.813	5.338	X	Tape 1	☑	☑	☑	X	
Decoder 5	12.19	5%	5.386	1.806	3.982	X	Tape 1	☑	☑	☑	X	
Decoder 5	12.19	10%	5.522	2.070	4.174	X	Tape 1	☑	☑	☑	X	
Decoder 5	12.19	25%	6.122	3.063	4.946	X	Tape 1	☑	☑	☑	X	
Decoder 5	12.19	30%	6.272	3.369	5.163	X	Tape 1	☑	☑	☑	X	
Decoder 5	12.18	50%	7.630	5.356	6.750	X	Tape 1	☑	☑	☑	X	
Decoder 5	12.16	75%	9.630	8.350	9.120	X	Tape 1	☑	☑	☑	X	
Decoder 5	12.14	100%	12.130	12.120	12.120	X	Tape 1	☑	☑	☑	X	
Decoder 5	24.43	0%	0.370	0.300	0.170	X	Tape 2	☐	☐	☐	X	
Decoder 5	24.43	1%	11.330	8.200	13.300	X	Tape 2	☑	☑	☑	X	
Decoder 5	24.43	5%	11.470	8.380	13.410	X	Tape 2	☑	☑	☑	X	
Decoder 5	24.43	10%	11.720	8.690	13.630	X	Tape 2	☑	☑	☑	X	
Decoder 5	24.43	15%	12.020	9.060	13.890	X	Tape 2	☑	☑	☑	X	
Decoder 5	24.43	25%	12.880	10.110	14.620	X	Tape 2	☑	☑	☑	X	
Decoder 5	24.43	30%	13.380	10.730	15.060	X	Tape 2	☑	☑	☑	X	
Decoder 5	24.42	50%	15.860	13.760	17.160	X	Tape 2	☑	☑	☑	X	
Decoder 5	24.42	75%	19.740	18.580	20.470	X	Tape 2	☑	☑	☑	X	
Decoder 5	24.42	100%	24.420	24.420	24.420	X	Tape 2	☑	☑	☑	X	
Decoder 5	12.19	0%	0.015	0.013	0.016	X	Tape 3-5	☐	☐	☐	X	
Decoder 5	12.19	1%	9.050	6.770	2.861	X	Tape 3-5	☑	☑	☑	X	Tape 3-5 On
Decoder 5	12.19	5%	8.990	6.800	0.401	X	Tape 3-5	☑	☑	☑	X	
Decoder 5	12.19	10%	7.880	6.890	0.530	X	Tape 3-5	☑	☑	☑	X	
Decoder 5	12.19	15%	7.790	7.010	0.866	X	Tape 3-5	☑	☑	☑	X	
Decoder 5	12.17	25%	8.060	7.340	1.664	X	Tape 3-5	☑	☑	☑	X	

Decoder #	In V@ Decoder	Percent	C1	C2	C3	C4	Tape #?	Turns on?				Notes
Decoder 5	12.17	30%	8.240	7.530	2.123	X	Tape 3-5	☑	☑	☑	X	
Decoder 5	12.13	50%	9.060	8.500	4.279	X	Tape 3-5	☑	☑	☑	X	
Decoder 5	12.08	75%	10.300	10.050	7.670	X	Tape 3-5	☑	☑	☑	X	
Decoder 5	12.00	100%	11.960	11.960	11.960	X	Tape 3-5	☑	☑	☑	X	
Decoder 5	24.47	0%	0.640	0.150	0.110	X	Tape 6	☐	☐	☐	X	
Decoder 5	24.47	1%	8.190	11.680	12.680	X	Tape 6	☑	☑	☑	X	
Decoder 5	24.47	5%	8.440	10.790	10.590	X	Tape 6	☑	☑	☑	X	
Decoder 5	24.47	10%	8.730	11.070	10.870	X	Tape 6	☑	☑	☑	X	
Decoder 5	24.47	15%	9.080	11.380	11.190	X	Tape 6	☑	☑	☑	X	
Decoder 5	24.46	25%	10.100	12.250	12.080	X	Tape 6	☑	☑	☑	X	
Decoder 5	24.45	50%	13.710	15.300	15.170	X	Tape 6	☑	☑	☑	X	
Decoder 5	24.44	75%	18.510	19.370	19.310	X	Tape 6	☑	☑	☑	X	
Decoder 5	24.41	100%	24.400	24.400	24.400	X	Tape 6	☑	☑	☑	X	
Decoder 5		N/A					Tape 7	☐	X	X	X	
Decoder 5		N/A					Tape 8	☐	☐	X	X	
Decoder 5		N/A					Tape 9	☐	☐	☐	☐	
Decoder 5		N/A					Tape 10	☐	☐	☐	☐	
Decoder 5		N/A					Tape 11	☐	☐	☐	☐	
Decoder 5		N/A					Tape12	☐	☐	☐	☐	
Decoder 6	12.19	0%	0.007	0.005	0.005	0.005	No Tape	☐	☐	☐	☐	
Decoder 6	12.19	1%	12.450	12.450	12.450	12.450	No Tape	☐	☐	☐	☐	
Decoder 6	12.19	5%	12.440	12.440	12.440	12.440	No Tape	☐	☐	☐	☐	
Decoder 6	12.19	10%	12.430	12.430	12.430	12.430	No Tape	☐	☐	☐	☐	
Decoder 6	12.19	15%	12.420	12.420	12.420	12.420	No Tape	☐	☐	☐	☐	
Decoder 6	12.19	25%	12.400	12.400	12.400	12.400	No Tape	☐	☐	☐	☐	
Decoder 6	12.19	50%	12.340	12.340	12.340	12.340	No Tape	☐	☐	☐	☐	
Decoder 6	12.19	75%	12.270	12.270	12.270	12.270	No Tape	☐	☐	☐	☐	
Decoder 6	12.19	100%	12.190	12.190	12.190	12.190	No Tape	☐	☐	☐	☐	
Decoder 6	12.19	0%	0.327	0.964	0.080	0.030	Tape 1	☐	☐	☐	☐	
Decoder 6	12.19	1%	5.804	4.184	6.770	6.940	Tape 1	☑	☑	☑	☑	
Decoder 6	12.19	5%	6.136	4.604	6.900	7.190	Tape 1	☑	☑	☑	☑	
Decoder 6	12.19	10%	6.460	5.010	7.180	7.450	Tape 1	☑	☑	☑	☑	
Decoder 6	12.19	15%	6.750	5.373	7.430	7.690	Tape 1	☑	☑	☑	☑	
Decoder 6	12.19	25%	7.400	6.186	8.000	8.220	Tape 1	☑	☑	☑	☑	
Decoder 6	12.19	30%	7.720	6.582	8.270	8.480	Tape 1	☑	☑	☑	☑	
Decoder 6	12.16	50%	8.990	8.170	9.370	9.520	Tape 1	☑	☑	☑	☑	
Decoder 6	12.14	75%	10.550	10.150	10.740	10.810	Tape 1	☑	☑	☑	☑	
Decoder 6	12.12	100%	12.070	12.070	12.070	12.070	Tape 1	☑	☑	☑	☑	
Decoder 6	24.42	0%	0.035	0.040	0.030	X	Tape 2	☑	☑	☑	X	
Decoder 6	24.42	1%	11.660	8.550	13.620	X	Tape 2	☑	☑	☑	X	
Decoder 6	24.42	5%	12.390	9.450	14.210	X	Tape 2	☑	☑	☑	X	
Decoder 6	24.42	10%	13.080	10.300	14.790	X	Tape 2	☑	☑	☑	X	
Decoder 6	24.42	15%	13.700	11.060	15.320	X	Tape 2	☑	☑	☑	X	
Decoder 6	24.42	25%	15.040	12.720	16.460	X	Tape 2	☑	☑	☑	X	
Decoder 6	24.42	30%	17.020	13.540	15.700	X	Tape 2	☑	☑	☑	X	
Decoder 6	24.42	50%	18.290	16.750	19.220	X	Tape 2	☑	☑	☑	X	
Decoder 6	24.42	75%	21.450	20.690	21.890	X	Tape 2	☑	☑	☑	X	
Decoder 6	24.42	100%	24.420	24.420	24.420	X	Tape 2	☑	☑	☑	X	
Decoder 6	12.19	0%	0.007	0.006	0.012	X	Tape 3-5	☐	☐	☐	X	

Thesis Data!

Decoder #	In V@ Decoder	Percent	C1	C2	C3	C4	Tape #?	Turns on?				Notes
Decoder 6	12.19	1%	9.290	6.950	4.131	X	Tape 3-5	☑	☑	☑	X	Tape 3-5 On
Decoder 6	12.18	5%	9.030	7.190	4.530	X	Tape 3-5	☑	☑	☑	X	
Decoder 6	12.17	10%	9.070	7.450	4.942	X	Tape 3-5	☑	☑	☑	X	
Decoder 6	12.16	15%	7.210	7.690	5.315	X	Tape 3-5	☑	☑	☑	X	
Decoder 6	12.14	25%	9.530	8.210	6.125	X	Tape 3-5	☑	☑	☑	X	
Decoder 6	12.13	30%	9.690	8.470	6.521	X	Tape 3-5	☑	☑	☑	X	
Decoder 6	12.09	50%	10.320	9.480	8.100	X	Tape 3-5	☑	☑	☑	X	
Decoder 6	12.03	75%	11.100	10.720	10.040	X	Tape 3-5	☑	☑	☑	X	
Decoder 6	11.98	100%	11.930	11.930	11.930	X	Tape 3-5	☑	☑	☑	X	
Decoder 6	24.47	0%	0.041	0.043	0.042	0.046	Tape 6	☐	☐	☐	☐	
Decoder 6	24.47	1%	8.650	11.980	13.270	13.830	Tape 6	☑	☑	☑	☑	
Decoder 6	24.47	5%	9.580	12.210	12.770	13.140	Tape 6	☑	☑	☑	☑	
Decoder 6	24.47	10%	10.400	12.860	13.380	13.710	Tape 6	☑	☑	☑	☑	
Decoder 6	24.46	15%	11.130	13.480	13.970	14.280	Tape 6	☑	☑	☑	☑	
Decoder 6	24.46	25%	12.760	14.810	15.240	15.520	Tape 6	☑	☑	☑	☑	
Decoder 6	24.44	50%	16.730	18.080	18.370	18.560	Tape 6	☑	☑	☑	☑	
Decoder 6	24.42	75%	20.670	21.290	21.440	21.530	Tape 6	☑	☑	☑	☑	
Decoder 6	24.40	100%	24.390	24.390	24.390	24.390	Tape 6	☑	☑	☑	☑	
Decoder 6		N/A					Tape 7	☐	X	X	X	
Decoder 6		N/A					Tape 8	☐	☐	X	X	
Decoder 6		N/A					Tape 9	☐	☐	☐	☐	
Decoder 6		N/A					Tape 10	☐	☐	☐	☐	
Decoder 6		N/A					Tape 11	☐	☐	☐	☐	
Decoder 6		N/A					Tape12	☐	☐	☐	☐	
Decoder 7	12.19	0%	1.699	1.654	1.654	1.678	No Tape	☐	☐	☐	☐	5000 hz, Square Law Curve
Decoder 7	12.19	1%	2.105	2.062	2.062	2.085	No Tape	☐	☐	☐	☐	
Decoder 7	12.19	5%	3.444	3.406	3.406	3.427	No Tape	☐	☐	☐	☐	
Decoder 7	12.19	10%	5.050	5.019	5.019	5.036	No Tape	☐	☐	☐	☐	
Decoder 7	12.19	15%	5.750	5.722	5.722	5.737	No Tape	☐	☐	☐	☐	
Decoder 7	12.19	25%	6.960	6.930	6.930	6.950	No Tape	☐	☐	☐	☐	
Decoder 7	12.19	50%	9.130	9.120	9.120	9.130	No Tape	☐	☐	☐	☐	
Decoder 7	12.19	75%	10.780	10.780	10.780	10.780	No Tape	☐	☐	☐	☐	
Decoder 7	12.19	100%	12.190	12.190	12.190	12.190	No Tape	☐	☐	☐	☐	
Decoder 7	12.19	0%	1.688	1.640	1.639	1.665	No Tape	☐	☐	☐	☐	5000 hz, linear Curve
Decoder 7	12.19	1%	2.186	2.160	2.155	2.165	No Tape	☐	☐	☐	☐	
Decoder 7	12.19	5%	2.599	2.574	2.570	2.578	No Tape	☐	☐	☐	☐	
Decoder 7	12.19	10%	3.135	3.113	3.108	3.116	No Tape	☐	☐	☐	☐	
Decoder 7	12.19	15%	3.629	3.610	3.605	3.611	No Tape	☐	☐	☐	☐	
Decoder 7	12.19	25%	4.699	4.685	4.680	4.684	No Tape	☐	☐	☐	☐	
Decoder 7	12.19	50%	7.340	7.330	7.330	7.330	No Tape	☐	☐	☐	☐	
Decoder 7	12.19	75%	9.930	9.930	9.930	9.920	No Tape	☐	☐	☐	☐	
Decoder 7	12.19	100%	12.190	12.190	12.190	12.190	No Tape	☐	☐	☐	☐	
Decoder 7	12.19	0%	1.688	1.641	1.640	1.666	No Tape	☐	☐	☐	☐	5000 hz, logarthjmic curve
Decoder 7	12.19	1%	1.697	1.653	1.654	1.676	No Tape	☐	☐	☐	☐	
Decoder 7	12.19	5%	1.838	1.810	1.813	1.827	No Tape	☐	☐	☐	☐	
Decoder 7	12.19	10%	1.990	1.963	1.961	1.972	No Tape	☐	☐	☐	☐	
Decoder 7	12.19	15%	2.061	2.033	2.029	2.039	No Tape	☐	☐	☐	☐	
Decoder 7	12.19	25%	2.108	2.080	2.076	2.085	No Tape	☐	☐	☐	☐	
Decoder 7	12.19	50%	2.356	2.331	2.326	2.335	No Tape	☐	☐	☐	☐	
Decoder 7	12.19	75%	3.784	3.766	3.761	3.767	No Tape	☐	☐	☐	☐	

Decoder #	In V@ Decoder	Percent	C1	C2	C3	C4	Tape #?	Turns on?				Notes
Decoder 7	12.19	100%	12.190	12.190	12.190	12.190	No Tape	☐	☐	☐	☐	
Decoder 7	12.19	0%	1.695	1.649	1.648	1.673	Tape 1	☐	☐	☐	☐	5000 hz, Square Law Curve
Decoder 7	12.19	1%	2.035	1.886	2.008	2.210	Tape 1	☑	☑	☑	☑	
Decoder 7	12.18	3%	2.742	2.563	2.643	2.932	Tape 1	☑	☑	☑	☑	
Decoder 7	12.18	5%	3.564	3.378	3.452	3.742	Tape 1	☑	☑	☑	☑	
Decoder 7	12.17	10%	5.240	5.050	5.269	5.369	Tape 1	☑	☑	☑	☑	
Decoder 7	12.16	15%	6.023	5.810	6.033	6.109	Tape 1	☑	☑	☑	☑	
Decoder 7	12.15	25%	7.240	7.070	7.190	7.300	Tape 1	☑	☑	☑	☑	
Decoder 7	12.15	30%	7.760	7.610	7.720	7,82	Tape 1	☑	☑	☑	☑	
Decoder 7	12.14	50%	9.370	9.260	9.370	9.460	Tape 1	☑	☑	☑	☑	
Decoder 7	12.13	75%	10.970	10.860	10.990	11.010	Tape 1	☑	☑	☑	☑	
Decoder 7	12.12	100%	12.040	12.030	12.040	12.030	Tape 1	☑	☑	☑	☑	
Decoder 7	12.19	0%	1.687	1.640	1.639	1.666	Tape 1	☐	☐	☐	☐	5000 hz, linear Curve
Decoder 7	12.19	1%	1.925	1.725	1.873	2.023	Tape 1	☑	☑	☑	☑	
Decoder 7	12.19	5%	2.145	1.988	2.098	2.329	Tape 1	☑	☑	☑	☑	
Decoder 7	12.18	10%	2.743	2.565	2.643	2.929	Tape 1	☑	☑	☑	☑	
Decoder 7	12.18	15%	3.342	3.150	3.226	3.520	Tape 1	☑	☑	☑	☑	
Decoder 7	12.17	25%	4.476	4.288	4.473	4.633	Tape 1	☑	☑	☑	☑	
Decoder 7	12.17	30%	5.031	4.852	5.062	5.175	Tape 1	☑	☑	☑	☑	
Decoder 7	12.15	50%	7.250	7.070	7.200	7.320	Tape 1	☑	☑	☑	☑	
Decoder 7	12.14	75%	9.790	9.690	9.820	9.880	Tape 1	☑	☑	☑	☑	
Decoder 7	12.12	100%	12.030	12.020	12.040	12.030	Tape 1	☑	☑	☑	☑	
Decoder 7	12.19	0%	1.689	1.643	1.642	1.642	Tape 1	☐	☐	☐	☐	5000 hz, logarthjmic curve
Decoder 7	12.19	1%	1.700	1.657	1.659	1.680	Tape 1	☐	☐	☐	☐	
Decoder 7	12.19	5%	1.854	1.768	1.842	1.852	Tape 1	☑	☑	☑	☑	
Decoder 7	12.19	10%	1.891	1.736	1.859	1.981	Tape 1	☑	☑	☑	☑	
Decoder 7	12.19	15%	1.901	1.731	1.848	1.981	Tape 1	☑	☑	☑	☑	
Decoder 7	12.19	25%	1.918	1.735	1.861	1.995	Tape 1	☑	☑	☑	☑	
Decoder 7	12.19	30%	1.925	1.736	1.866	2.004	Tape 1	☑	☑	☑	☑	
Decoder 7	12.19	50%	1.960	1.799	1.937	2.116	Tape 1	☑	☑	☑	☑	
Decoder 7	12.18	75%	3.527	3.339	3.412	3.704	Tape 1	☑	☑	☑	☑	
Decoder 7	12.12	100%	12.030	12.010	12.030	12.020	Tape 1	☑	☑	☑	☑	
Decoder 7	24.43	0%	1.706	1.663	1.662	X	Tape 2	☐	☐	☐	X	5000 hz, Square Law Curve
Decoder 7	24.42	1%	3.012	2.922	3.075	X	Tape 2	☑	☑	☑	X	
Decoder 7	24.42	5%	5.901	5.853	6.028	X	Tape 2	☑	☑	☑	X	
Decoder 7	24.42	10%	9.320	9.340	9.520	X	Tape 2	☑	☑	☑	X	
Decoder 7	24.42	15%	10.840	10.860	11.040	X	Tape 2	☑	☑	☑	X	
Decoder 7	24.42	25%	13.480	13.500	13.650	X	Tape 2	☑	☑	☑	X	
Decoder 7	24.42	30%	14.600	14.610	14.750	X	Tape 2	☑	☑	☑	X	
Decoder 7	24.42	50%	18.260	18.220	18.350	X	Tape 2	☑	☑	☑	X	
Decoder 7	24.42	75%	21.850	21.770	21.890	X	Tape 2	☑	☑	☑	X	
Decoder 7	24.42	100%	24.410	24.400	24.410	X	Tape 2	☑	☑	☑	X	
Decoder 7	24.42	0%	1.697	1.653	1.651	X	Tape 2	☐	☐	☐	X	5000 hz, linear Curve
Decoder 7	24.42	1%	2.450	2.340	2.473	X	Tape 2	☑	☑	☑	X	
Decoder 7	24.42	5%	3.274	3.193	3.353	X	Tape 2	☑	☑	☑	X	
Decoder 7	24.42	10%	4.411	4.350	4.523	X	Tape 2	☑	☑	☑	X	
Decoder 7	24.42	15%	5.489	5.440	5.617	X	Tape 2	☑	☑	☑	X	
Decoder 7	24.42	25%	7.750	7.770	7.950	X	Tape 2	☑	☑	☑	X	
Decoder 7	24.42	30%	8.910	8.930	9.110	X	Tape 2	☑	☑	☑	X	
Decoder 7	24.42	50%	13.490	13.510	13.660	X	Tape 2	☑	☑	☑	X	

Decoder #	In V@ Decoder	Percent	C1	C2	C3	C4	Tape #?	Turns on?				Notes
Decoder 7	24.42	75%	19.190	19.140	19.270	X	Tape 2	☑	☑	☑	X	
Decoder 7	24.42	100%	24.410	24.400	24.410	X	Tape 2	☑	☑	☑	X	
Decoder 7	24.42	0%	1.698	1.654	1.653	X	Tape 2	☐	☐	☐	X	5000 hz, logarthjmic curve
Decoder 7	24.42	1%	1.715	1.676	1.676	X	Tape 2	☐	☐	☐	X	
Decoder 7	24.42	2%	1.736	1.702	1.705	X	Tape 2	☐	☐	☐	X	
Decoder 7	24.42	3%	1.796	1.770	1.775	X	Tape 2	☐	☐	☐	X	
Decoder 7	24.42	4%	1.855	1.834	1.841	X	Tape 2	☐	☐	☐	X	
Decoder 7	24.42	5%	1.955	1.921	1.945	X	Tape 2	☐	☐	☐	X	
Decoder 7	24.42	6%	2.018	1.945	2.014	X	Tape 2	☑	☑	☑	X	
Decoder 7	24.42	10%	2.116	2.009	2.128	X	Tape 2	☑	☑	☑	X	
Decoder 7	24.42	15%	2.187	2.076	2.201	X	Tape 2	☑	☑	☑	X	
Decoder 7	24.42	25%	2.289	2.177	2.305	X	Tape 2	☑	☑	☑	X	
Decoder 7	24.42	30%	2.338	2.225	2.354	X	Tape 2	☑	☑	☑	X	
Decoder 7	24.42	50%	2.778	2.680	2.825	X	Tape 2	☑	☑	☑	X	
Decoder 7	24.42	75%	5.832	5.784	5.958	X	Tape 2	☑	☑	☑	X	
Decoder 7	24.41	100%	24.400	24.400	24.400	X	Tape 2	☑	☑	☑	X	
Decoder 7	12.19	0%	1.679	1.632	1.631	X	Tape 3-5	☐	☐	☐	X	5000 hz, Square Law Curve
Decoder 7	12.19	1%	2.847	2.414	2.091	X	Tape 3-5	☑	☑	☑	X	Tape 3-5 On
Decoder 7	12.17	5%	4.119	3.737	3.418	X	Tape 3-5	☑	☑	☑	X	
Decoder 7	12.14	10%	5.685	5.309	4.996	X	Tape 3-5	☑	☑	☑	X	
Decoder 7	12.14	15%	6.358	5.988	5.681	X	Tape 3-5	☑	☑	☑	X	
Decoder 7	12.12	25%	7.520	7.160	6.860	X	Tape 3-5	☑	☑	☑	X	
Decoder 7	12.12	30%	8.010	7.650	7.350	X	Tape 3-5	☑	☑	☑	X	
Decoder 7	12.10	50%	9.550	9.260	8.960	X	Tape 3-5	☑	☑	☑	X	
Decoder 7	12.07	75%	10.950	10.820	10.530	X	Tape 3-5	☑	☑	☑	X	
Decoder 7	12.06	100%	11.810	11.850	11.840	X	Tape 3-5	☑	☑	☑	X	
Decoder 7	12.19	0%	1.688	1.641	1.640	X	Tape 3-5	☐	☐	☐	X	5000 hz, linear Curve
Decoder 7	12.19	1%	2.729	2.148	1.817	X	Tape 3-5	☑	☑	☑	X	Tape 3-5 On
Decoder 7	12.19	5%	2.977	2.550	2.229	X	Tape 3-5	☑	☑	☑	X	
Decoder 7	12.18	10%	3.482	3.078	2.759	X	Tape 3-5	☑	☑	☑	X	
Decoder 7	12.17	15%	3.961	3.565	3.246	X	Tape 3-5	☑	☑	☑	X	
Decoder 7	12.16	25%	5.013	4.619	4.300	X	Tape 3-5	☑	☑	☑	X	
Decoder 7	12.15	30%	5.525	5.137	4.823	X	Tape 3-5	☑	☑	☑	X	
Decoder 7	12.13	50%	7.550	7.170	6.870	X	Tape 3-5	☑	☑	☑	X	
Decoder 7	12.09	75%	9.960	9.680	9.380	X	Tape 3-5	☑	☑	☑	X	
Decoder 7	12.06	100%	11.820	11.850	11.850	X	Tape 3-5	☑	☑	☑	X	
Decoder 7	12.19	0%	1.698	1.652	1.652	X	Tape 3-5	☐	☐	☐	X	5000 hz, logarithmic curve
Decoder 7	12.19	1%	1.709	1.665	1.666	X	Tape 3-5	☐	☐	☐	X	
Decoder 7	12.19	2%	1.724	1.682	1.683	X	Tape 3-5	☐	☐	☐	X	
Decoder 7	12.19	3%	1.773	1.731	1.730	X	Tape 3-5	☐	☐	☐	X	
Decoder 7	12.19	4%	1.818	1.777	1.763	X	Tape 3-5	☐	☐	☐	X	
Decoder 7	12.19	5%	1.903	1.864	1.772	X	Tape 3-5	☐	☐	☐	X	
Decoder 7	12.19	6%	1.996	1.944	1.764	X	Tape 3-5	☐	☑	☑	X	Tape 4 + 5 On
Decoder 7	12.19	7%	2.200	2.033	1.743	X	Tape 3-5	☐	☑	☑	X	
Decoder 7	12.19	8%	2.340	2.051	1.730	X	Tape 3-5	☐	☑	☑	X	
Decoder 7	12.19	9%	2.513	2.059	1.712	X	Tape 3-5	☐	☑	☑	X	
Decoder 7	12.19	10%	2.631	2.063	1.695	X	Tape 3-5	☐	☑	☑	X	
Decoder 7	12.19	11%	2.688	2.066	1.684	X	Tape 3-5	☐	☑	☑	X	
Decoder 7	12.19	12%	2.743	2.069	1.684	X	Tape 3-5	☑	☑	☑	X	Tape 3 On
Decoder 7	12.19	13%	2.770	2.071	1.688	X	Tape 3-5	☑	☑	☑	X	

Decoder #	In V@ Decoder	Percent	C1	C2	C3	C4	Tape #?	Turns on?				Notes
Decoder 7	12.19	14%	2.796	2.072	1.694	X	Tape 3-5	☑	☑	☑	X	
Decoder 7	12.19	15%	2.806	2.073	1.696	X	Tape 3-5	☑	☑	☑	X	
Decoder 7	12.19	25%	2.793	2.087	1.739	X	Tape 3-5	☑	☑	☑	X	
Decoder 7	12.19	30%	2.760	2.103	1.762	X	Tape 3-5	☑	☑	☑	X	
Decoder 7	12.19	50%	2.793	2.312	1.987	X	Tape 3-5	☑	☑	☑	X	
Decoder 7	12.17	75%	4.117	3.715	3.397	X	Tape 3-5	☑	☑	☑	X	
Decoder 7	12.06	100%	11.820	11.850	11.850	X	Tape 3-5	☑	☑	☑	X	
Decoder 7	24.47	0%	1.707	1.666	1.665	1.685	Tape 6	☐	☐	☐	☐	5000 hz, Square Law Curve
Decoder 7	24.46	1%	2.301	2.573	2.636	2.742	Tape 6	☑	☑	☑	☑	
Decoder 7	24.45	5%	5.806	6.110	6.180	6.384	Tape 6	☑	☑	☑	☑	
Decoder 7	24.44	10%	9.120	9.610	9.840	9.820	Tape 6	☑	☑	☑	☑	
Decoder 7	24.44	15%	10.820	11.180	11.590	11.500	Tape 6	☑	☑	☑	☑	
Decoder 7	24.42	25%	13.450	13.770	14.150	13.990	Tape 6	☑	☑	☑	☑	
Decoder 7	24.42	30%	13.450	13.770	14.150	13.990	Tape 6	☑	☑	☑	☑	
Decoder 7	24.41	50%	18.340	18.710	18.690	18.750	Tape 6	☑	☑	☑	☑	
Decoder 7	24.40	75%	21.920	22.090	22.150	22.090	Tape 6	☑	☑	☑	☑	
Decoder 7	24.39	100%	24.310	24.300	24.310	24.310	Tape 6	☑	☑	☑	☑	
Decoder 7	24.46	0%	1.684	1.640	1.639	1.663	Tape 6	☐	☐	☐	☐	5000 hz, linear Curve
Decoder 7	24.46	1%	1.690	2.130	2.280	2.197	Tape 6	☑	☑	☑	☑	
Decoder 7	24.46	5%	2.635	2.910	2.931	3.107	Tape 6	☑	☑	☑	☑	
Decoder 7	24.46	10%	4.077	4.033	4.385	4.591	Tape 6	☑	☑	☑	☑	
Decoder 7	24.45	15%	5.371	5.646	5.717	5.915	Tape 6	☑	☑	☑	☑	
Decoder 7	24.44	25%	7.380	8.020	8.030	8.090	Tape 6	☑	☑	☑	☑	
Decoder 7	24.42	50%	13.470	13.790	14.170	14.010	Tape 6	☑	☑	☑	☑	
Decoder 7	24.41	75%	19.300	19.650	19.650	19.650	Tape 6	☑	☑	☑	☑	
Decoder 7	24.39	100%	24.310	24.310	24.310	24.310	Tape 6	☑	☑	☑	☑	
Decoder 7	24.45	0%	1.689	1.645	1.644	1.667	Tape 6	☐	☐	☐	☐	5000 hz, logarithmic curve
Decoder 7	24.45	1%	1.707	1.671	1.672	1.688	Tape 6	☐	☐	☐	☐	
Decoder 7	24.45	5%	1.838	1.915	1.943	1.894	Tape 6	☐	☐	☐	☐	
Decoder 7	24.45	6%	1.807	1.986	2.035	1.955	Tape 6	☑	☐	☐	☐	
Decoder 7	24.45	7%	1.730	2.045	2.128	2.062	Tape 6	☑	☑	☑	☑	
Decoder 7	24.45	10%	1.696	2.081	2.200	2.140	Tape 6	☑	☑	☑	☑	
Decoder 7	24.45	15%	1.715	2.108	2.232	2.150	Tape 6	☑	☑	☑	☑	
Decoder 7	24.45	25%	1.674	2.127	2.268	2.167	Tape 6	☑	☑	☑	☑	
Decoder 7	24.45	50%	2.041	2.305	2.422	2.473	Tape 6	☑	☑	☑	☑	
Decoder 7	24.44	75%	5.737	6.302	6.102	6.302	Tape 6	☑	☑	☑	☑	
Decoder 7	24.40	100%	24.300	24.300	24.300	24.300	Tape 6	☑	☑	☑	☑	
Decoder 7	12.01	0%	1.910	X	X	X	Tape 7	☐	X	X	X	5000 hz, Square Law Curve
Decoder 7	12.00	1%	2.413	X	X	X	Tape 7	☑	X	X	X	
Decoder 7	11.99	5%	3.713	X	X	X	Tape 7	☑	X	X	X	
Decoder 7	11.98	10%	5.268	X	X	X	Tape 7	☑	X	X	X	
Decoder 7	11.98	15%	5.945	X	X	X	Tape 7	☑	X	X	X	
Decoder 7	11.97	25%	7.110	X	X	X	Tape 7	☑	X	X	X	
Decoder 7	11.96	50%	9.220	X	X	X	Tape 7	☑	X	X	X	
Decoder 7	11.95	75%	10.790	X	X	X	Tape 7	☑	X	X	X	
Decoder 7	11.94	100%	11.850	X	X	X	Tape 7	☑	X	X	X	
Decoder 7	12.00	0%	1.693	X	X	X	Tape 7	☐	X	X	X	5000 hz, linear Curve
Decoder 7	12.00	1%	2.142	X	X	X	Tape 7	☑	X	X	X	
Decoder 7	11.99	5%	2.536	X	X	X	Tape 7	☑	X	X	X	
Decoder 7	11.97	10%	3.045	X	X	X	Tape 7	☑	X	X	X	

Decoder #	In V@ Decoder	Percent	C1	C2	C3	C4	Tape #?	Turns on?				Notes
Decoder 7	11.96	15%	3.515	X	X	X	Tape 7	☑	X	X	X	
Decoder 7	11.94	25%	4.536	X	X	X	Tape 7	☑	X	X	X	
Decoder 7	11.90	50%	7.060	X	X	X	Tape 7	☑	X	X	X	
Decoder 7	11.82	75%	9.530	X	X	X	Tape 7	☑	X	X	X	
Decoder 7	11.82	100%	11.760	X	X	X	Tape 7	☑	X	X	X	
Decoder 7	11.99	0%	1.693	X	X	X	Tape 7	☐	X	X	X	5000 hz, logarithmic curve
Decoder 7	11.99	1%	1.701	X	X	X	Tape 7	☐	X	X	X	
Decoder 7	11.99	5%	1.870	X	X	X	Tape 7	☐	X	X	X	
Decoder 7	12.00	6%	1.935	X	X	X	Tape 7	☑	X	X	X	
Decoder 7	11.99	10%	1.994	X	X	X	Tape 7	☑	X	X	X	
Decoder 7	12.00	15%	2.019	X	X	X	Tape 7	☑	X	X	X	
Decoder 7	12.00	25%	2.063	X	X	X	Tape 7	☑	X	X	X	
Decoder 7	11.99	50%	2.300	X	X	X	Tape 7	☑	X	X	X	
Decoder 7	11.97	75%	3.668	X	X	X	Tape 7	☑	X	X	X	
Decoder 7	11.82	100%	11.740	X	X	X	Tape 7	☑	X	X	X	
Decoder 7	12.01	0%	1.691	1.644	X	X	Tape 8	☐	☐	X	X	5000 hz, Square Law Curve
Decoder 7	12.00	1%	2.326	2.325	X	X	Tape 8	☑	☑	X	X	
Decoder 7	12.00	5%	3.618	3.664	X	X	Tape 8	☑	☑	X	X	
Decoder 7	11.99	10%	5.171	5.248	X	X	Tape 8	☑	☑	X	X	
Decoder 7	11.99	15%	5.856	5.933	X	X	Tape 8	☑	☑	X	X	
Decoder 7	11.99	25%	7.040	7.110	X	X	Tape 8	☑	☑	X	X	
Decoder 7	11.98	50%	9.190	9.240	X	X	Tape 8	☑	☑	X	X	
Decoder 7	11.97	75%	10.810	10.820	X	X	Tape 8	☑	☑	X	X	
Decoder 7	11.97	100%	11.940	11.940	X	X	Tape 8	☑	☑	X	X	
Decoder 7	12.00	0%	1.691	1.645	X	X	Tape 8	☐	☐	X	X	5000 hz, linear Curve
Decoder 7	12.00	1%	2.061	2.050	X	X	Tape 8	☑	☑	X	X	
Decoder 7	11.99	5%	2.447	2.452	X	X	Tape 8	☑	☑	X	X	
Decoder 7	11.99	10%	2.957	2.982	X	X	Tape 8	☑	☑	X	X	
Decoder 7	11.98	15%	3.435	3.476	X	X	Tape 8	☑	☑	X	X	
Decoder 7	11.97	25%	4.455	4.532	X	X	Tape 8	☑	☑	X	X	
Decoder 7	11.95	50%	7.020	7.070	X	X	Tape 8	☑	☑	X	X	
Decoder 7	11.92	75%	9.570	9.600	X	X	Tape 8	☑	☑	X	X	
Decoder 7	11.90	100%	11.870	11.870	X	X	Tape 8	☑	☑	X	X	
Decoder 7	11.99	0%	1.694	1.648	X	X	Tape 8	☐	☐	X	X	5000 hz, logarithmic curve
Decoder 7	11.99	1%	1.701	1.659	X	X	Tape 8	☐	☐	X	X	
Decoder 7	11.99	5%	1.853	1.834	X	X	Tape 8	☐	☐	X	X	
Decoder 7	11.99	6%	1.888	1.871	X	X	Tape 8	☑	☑	X	X	
Decoder 7	11.99	10%	1.914	1.900	X	X	Tape 8	☑	☑	X	X	
Decoder 7	11.98	15%	1.941	1.927	X	X	Tape 8	☐	☐	X	X	
Decoder 7	11.98	25%	1.985	1.972	X	X	Tape 8	☐	☐	X	X	
Decoder 7	11.98	50%	2.219	2.212	X	X	Tape 8	☐	☐	X	X	
Decoder 7	11.94	75%	3.575	3.614	X	X	Tape 8	☐	☐	X	X	
Decoder 7	11.83	100%	11.800	11.790	X	X	Tape 8	☐	☐	X	X	
Decoder 7	24.43	0%	1.695	1.651	X	X	Tape 9	☐	☐	X	X	5000 hz, Square Law Curve
Decoder 7	24.43	1%	2.396	3.795	X	X	Tape 9	☑	☑	X	X	
Decoder 7	24.41	5%	5.575	7.000	X	X	Tape 9	☑	☑	X	X	
Decoder 7	24.39	10%	9.080	10.480	X	X	Tape 9	☑	☑	X	X	
Decoder 7	24.38	15%	10.690	11.970	X	X	Tape 9	☑	☑	X	X	
Decoder 7	24.37	25%	13.470	14.530	X	X	Tape 9	☑	☑	X	X	
Decoder 7	24.34	50%	18.480	19.140	X	X	Tape 9	☑	☑	X	X	

Decoder #	In V@ Decoder	Percent	C1	C2	C3	C4	Tape #?	Turns on?				Notes
Decoder 7	24.32	75%	21.920	22.100	X	X	Tape 9	☑	☑	X	X	
Decoder 7	24.30	100%	24.070	24.070	X	X	Tape 9	☑	☑	X	X	
Decoder 7	24.45	0%	1.705	1.662	X	X	Tape 9	☐	☐	X	X	5000 hz, linear Curve
Decoder 7	24.45	1%	1.984	3.101	X	X	Tape 9	☑	☑	X	X	
Decoder 7	24.44	5%	2.740	4.143	X	X	Tape 9	☑	☑	X	X	
Decoder 7	24.43	10%	4.040	5.464	X	X	Tape 9	☑	☑	X	X	
Decoder 7	24.42	15%	5.193	6.600	X	X	Tape 9	☑	☑	X	X	
Decoder 7	24.41	25%	7.450	8.950	X	X	Tape 9	☑	☑	X	X	
Decoder 7	24.37	50%	13.510	14.550	X	X	Tape 9	☑	☑	X	X	
Decoder 7	24.34	75%	19.430	19.990	X	X	Tape 9	☑	☑	X	X	
Decoder 7	24.30	100%	24.080	24.080	X	X	Tape 9	☑	☑	X	X	
Decoder 7	24.42	0%	1.699	1.656	X	X	Tape 9	☐	☐	X	X	5000 hz, logarithmic curve
Decoder 7	24.42	1%	1.721	1.686	X	X	Tape 9	☐	☐	X	X	
Decoder 7	24.42	5%	1.888	2.055	X	X	Tape 9	☐	☐	X	X	
Decoder 7	24.42	8%	1.890	2.647	X	X	Tape 9	☑	☑	X	X	
Decoder 7	24.42	10%	2.006	2.790	X	X	Tape 9	☑	☑	X	X	
Decoder 7	24.42	15%	1.998	2.834	X	X	Tape 9	☑	☑	X	X	
Decoder 7	24.42	25%	1.958	2.923	X	X	Tape 9	☑	☑	X	X	
Decoder 7	24.42	50%	2.152	3.506	X	X	Tape 9	☑	☑	X	X	
Decoder 7	24.40	75%	5.523	6.940	X	X	Tape 9	☑	☑	X	X	
Decoder 7	24.29	100%	24.050	24.050	X	X	Tape 9	☑	☑	X	X	
Decoder 7	24.43	0%	1.693	1.649	1.647	1.671	Tape 10	☐	☐	☐	☐	5000 hz, Square Law Curve
Decoder 7	24.42	1%	2.612	2.632	2.854	2.673	Tape 10	☑	☑	☑	☑	
Decoder 7	24.40	5%	5.929	6.233	6.375	6.080	Tape 10	☑	☑	☑	☑	
Decoder 7	24.39	10%	9.100	9.790	9.960	9.570	Tape 10	☑	☑	☑	☑	
Decoder 7	24.38	15%	10.640	11.300	11.590	11.230	Tape 10	☑	☑	☑	☑	
Decoder 7	24.37	25%	13.200	13.780	14.160	13.850	Tape 10	☑	☑	☑	☑	
Decoder 7	24.34	50%	18.150	18.670	18.690	18.430	Tape 10	☑	☑	☑	☑	
Decoder 7	24.32	75%	21.720	22.000	21.980	21.840	Tape 10	☑	☑	☑	☑	
Decoder 7	24.30	100%	24.160	24.150	24.160	24.070	Tape 10	☑	☑	☑	☑	
Decoder 7	24.43	0%	1.699	1.656	1.654	1.677	Tape 10	☐	☐	☐	☐	5000 hz, linear Curve
Decoder 7	24.43	1%	1.986	2.238	2.441	2.188	Tape 10	☑	☑	☑	☑	
Decoder 7	24.42	5%	2.940	2.989	3.210	2.999	Tape 10	☑	☑	☑	☑	
Decoder 7	24.41	10%	4.309	4.452	4.642	4.400	Tape 10	☑	☑	☑	☑	
Decoder 7	24.41	15%	5.519	5.775	5.923	5.654	Tape 10	☑	☑	☑	☑	
Decoder 7	24.39	25%	7.490	8.220	8.350	7.940	Tape 10	☑	☑	☑	☑	
Decoder 7	24.36	50%	13.230	13.810	14.190	13.880	Tape 10	☑	☑	☑	☑	
Decoder 7	24.32	75%	19.120	19.600	19.600	19.330	Tape 10	☑	☑	☑	☑	
Decoder 7	24.29	100%	24.170	24.100	24.160	24.080	Tape 10	☑	☑	☑	☑	
Decoder 7	24.43	0%	1.701	1.658	1.657	1.679	Tape 10	☐	☐	☐	☐	5000 hz, logarithmic curve
Decoder 7	24.43	1%	1.718	1.683	1.683	1.699	Tape 10	☐	☐	☐	☐	
Decoder 7	24.43	5%	1.831	1.934	1.929	1.947	Tape 10	☑	☐	☐	☐	
Decoder 7	24.43	7%	1.642	2.117	2.136	2.207	Tape 10	☑	☑	☐	☐	
Decoder 7	24.43	8%	1.592	2.134	2.172	2.256	Tape 10	☑	☑	☑	☑	
Decoder 7	24.43	10%	1.607	2.155	2.187	2.254	Tape 10	☑	☑	☑	☑	
Decoder 7	24.43	15%	1.623	2.196	2.264	2.200	Tape 10	☑	☑	☑	☑	
Decoder 7	24.43	25%	1.817	2.237	2.358	2.140	Tape 10	☑	☑	☑	☑	
Decoder 7	24.42	50%	2.353	2.360	2.606	2.428	Tape 10	☑	☑	☑	☑	
Decoder 7	24.40	75%	5.862	6.155	6.299	6.009	Tape 10	☑	☑	☑	☑	
Decoder 7	24.29	100%	24.120	24.120	24.120	24.050	Tape 10	☑	☑	☑	☑	

Decoder #	In V@ Decoder	Percent	C1	C2	C3	C4	Tape #?	Turns on?				Notes
Decoder 7	24.42	0%	1.691	1.647	1.646	1.670	Tape 11	☐	☐	☐	☐	5000 hz, Square Law Curve
Decoder 7	24.41	1%	2.624	2.725	2.916	2.626	Tape 11	☑	☑	☑	☑	
Decoder 7	24.40	5%	5.906	6.266	6.397	6.019	Tape 11	☑	☑	☑	☑	
Decoder 7	24.37	10%	9.080	9.770	9.950	9.500	Tape 11	☑	☑	☑	☑	
Decoder 7	24.37	15%	10.610	11.280	11.570	11.160	Tape 11	☑	☑	☑	☑	
Decoder 7	24.35	25%	13.180	13.770	14.140	13.790	Tape 11	☑	☑	☑	☑	
Decoder 7	24.32	50%	18.120	18.630	18.660	18.370	Tape 11	☑	☑	☑	☑	
Decoder 7	24.30	75%	21.700	21.970	21.960	21.790	Tape 11	☑	☑	☑	☑	
Decoder 7	24.28	100%	24.140	24.140	24.150	24.050	Tape 11	☑	☑	☑	☑	
Decoder 7	24.43	0%	1.700	1.658	1.656	1.679	Tape 11	☐	☐	☐	☐	5000 hz, linear Curve
Decoder 7	24.43	1%	2.022	2.275	2.459	2.158	Tape 11	☑	☑	☑	☑	
Decoder 7	24.42	5%	2.945	3.081	3.275	2.944	Tape 11	☑	☑	☑	☑	
Decoder 7	24.41	10%	4.300	4.517	4.,689	4.330	Tape 11	☑	☑	☑	☑	
Decoder 7	24.41	15%	5.498	5.811	5.953	5.573	Tape 11	☑	☑	☑	☑	
Decoder 7	24.39	25%	7.480	8.210	8.350	7.870	Tape 11	☑	☑	☑	☑	
Decoder 7	24.36	50%	13.210	13.800	14.160	13.810	Tape 11	☑	☑	☑	☑	
Decoder 7	24.32	75%	19.100	19.560	19.580	19.270	Tape 11	☑	☑	☑	☑	
Decoder 7	24.29	100%	24.170	24.160	24.170	24.080	Tape 11	☑	☑	☑	☑	
Decoder 7	24.43	0%	1.707	1.665	1.663	1.685	Tape 11	☐	☐	☐	☐	5000 hz, logarithmic curve
Decoder 7	24.43	1%	1.724	1.689	1.689	1.705	Tape 11	☐	☐	☐	☐	
Decoder 7	24.43	5%	1.843	1.941	1.940	1.954	Tape 11	☑	☐	☐	☐	
Decoder 7	24.43	7%	1.680	2.139	2.164	2.232	Tape 11	☑	☑	☐	☐	
Decoder 7	24.43	8%	1.608	2.161	2.202	2.273	Tape 11	☑	☑	☑	☑	
Decoder 7	24.43	10%	1.611	2.183	2.220	2.249	Tape 11	☑	☑	☑	☑	
Decoder 7	24.43	15%	1.669	2.228	2.289	2.186	Tape 11	☑	☑	☑	☑	
Decoder 7	24.43	25%	1.873	2.274	2.377	2.120	Tape 11	☑	☑	☑	☑	
Decoder 7	24.42	50%	2.365	2.458	2.675	2.382	Tape 11	☑	☑	☑	☑	
Decoder 7	24.40	75%	5.837	6.190	6.326	5.942	Tape 11	☑	☑	☑	☑	
Decoder 7	24.29	100%	24.120	24.110	24.130	24.050	Tape 11	☑	☑	☑	☑	
Decoder 7	24.43	0%	1.703	1.660	1.658	1.680	Tape12	☐	☐	☐	☐	5000 hz, Square Law Curve
Decoder 7	24.42	1%	2.457	2.891	3.324	2.801	Tape12	☑	☑	☑	☑	
Decoder 7	24.39	5%	5.600	6.256	6.620	5.963	Tape12	☑	☑	☑	☑	
Decoder 7	24.35	10%	9.230	9.980	10.310	9.640	Tape12	☑	☑	☑	☑	
Decoder 7	24.33	15%	10.730	11.370	11.910	11.210	Tape12	☑	☑	☑	☑	
Decoder 7	24.31	25%	13.390	13.850	14.480	13.780	Tape12	☑	☑	☑	☑	
Decoder 7	24.26	50%	18.130	18.520	18.660	18.170	Tape12	☑	☑	☑	☑	
Decoder 7	24.22	75%	21.530	21.830	21.970	21.560	Tape12	☑	☑	☑	☑	
Decoder 7	24.20	100%	23.930	23.920	23.940	23.940	Tape12	☑	☑	☑	☑	
Decoder 7	24.42	0%	1.696	1.653	1.648	1.673	Tape12	☐	☐	☐	☐	5000 hz, linear Curve
Decoder 7	24.42	1%	1.702	2.625	2.852	2.047	Tape12	☑	☑	☑	☑	
Decoder 7	24.41	5%	2.783	3.205	3.653	3.138	Tape12	☑	☑	☑	☑	
Decoder 7	24.40	10%	4.050	4.607	5.002	4.422	Tape12	☑	☑	☑	☑	
Decoder 7	24.39	15%	5.180	5.824	6.192	5.544	Tape12	☑	☑	☑	☑	
Decoder 7	24.36	25%	7.620	8.360	8.630	7.960	Tape12	☑	☑	☑	☑	
Decoder 7	24.30	50%	13.410	13.870	14.490	13.800	Tape12	☑	☑	☑	☑	
Decoder 7	24.25	75%	19.020	19.400	19.530	19.050	Tape12	☑	☑	☑	☑	
Decoder 7	24.19	100%	23.940	23.920	23.950	23.950	Tape12	☑	☑	☑	☑	
Decoder 7	24.43	0%	1.710	1.668	1.667	1.689	Tape12	☑	☐	☐	☐	5000 hz, logarithmic curve
Decoder 7	24.43	1%	1.726	1.693	1.695	1.708	Tape12	☐	☐	☐	☐	
Decoder 7	24.43	5%	1.795	1.959	1.990	1.882	Tape12	☑	☐	☐	☐	

Decoder #	In V@ Decoder	Percent	C1	C2	C3	C4	Tape #?	Turns on?				Notes
Decoder 7	24.43	6%	1.714	2.087	2.142	1.892	Tape12	☑	☐	☐	☑	
Decoder 7	24.43	7%	1.654	2.294	2.419	1.896	Tape12	☑	☑	☐	☑	
Decoder 7	24.43	8%	1.651	2.347	2.510	1.900	Tape12	☑	☑	☑	☑	
Decoder 7	24.43	10%	1.457	2.427	2.602	1.839	Tape12	☑	☑	☑	☑	
Decoder 7	24.43	15%	1.396	2.479	2.649	1.797	Tape12	☑	☑	☑	☑	
Decoder 7	24.43	25%	1.512	2.572	2.747	1.834	Tape12	☑	☑	☑	☑	
Decoder 7	24.42	50%	2.150	2.675	3.073	2.495	Tape12	☑	☑	☑	☑	
Decoder 7	24.38	75%	5.522	6.181	6.543	5.889	Tape12	☑	☑	☑	☑	
Decoder 7	24.19	100%	23.920	23.900	23.930	23.940	Tape12	☑	☑	☑	☑	
Decoder 8	24.17	0%	0.038	0.035	0.038	0.041	No Tape	☐	☐	☐	☐	DC 0.1
Decoder 8	24.17	1%	24.320	24.310	24.320	24.310	No Tape	☐	☐	☐	☐	RGBW
Decoder 8	24.17	15%	24.240	24.240	24.240	24.240	No Tape	☐	☐	☐	☐	
Decoder 8	24.17	50%	24.200	24.200	24.200	24.200	No Tape	☐	☐	☐	☐	
Decoder 8	24.17	100%	24.17	24.17	24.17	24.17	No Tape	☐	☐	☐	☐	
Decoder 8	24.17	0%	0.063	0.090	0.090	0.090	No Tape	☐	☐	☐	☐	DC 0.8
Decoder 8	24.17	1%	24.540	24.530	24.540	24.540	No Tape	☐	☐	☐	☐	RGBW
Decoder 8	24.17	15%	24.480	24.480	24.480	24.480	No Tape	☐	☐	☐	☐	
Decoder 8	24.17	50%	24.340	24.340	24.340	24.340	No Tape	☐	☐	☐	☐	
Decoder 8	24.17	100%	24.170	24.170	24.170	24.170	No Tape	☐	☐	☐	☐	
Decoder 8	24.17	0%	0.082	0.085	0.082	0.085	No Tape	☐	☐	☐	☐	DC 1.0
Decoder 8	24.17	1%	24.550	24.550	24.550	24.550	No Tape	☐	☐	☐	☐	RGBW
Decoder 8	24.17	15%	24.500	24.500	24.500	24.500	No Tape	☐	☐	☐	☐	
Decoder 8	24.17	50%	24.370	24.370	24.370	24.370	No Tape	☐	☐	☐	☐	
Decoder 8	24.17	100%	24.170	24.170	24.170	24.170	No Tape	☐	☐	☐	☐	
Decoder 8	24.17	0%	0.135	0.133	0.147	0.147	No Tape	☐	☐	☐	☐	DC 1.5 (factory)
Decoder 8	24.17	1%	24.510	24.540	24.550	24.550	No Tape	☐	☐	☐	☐	RGBW
Decoder 8	24.17	15%	24.530	24.530	24.530	24.530	No Tape	☐	☐	☐	☐	
Decoder 8	24.17	50%	24.420	24.420	24.420	24.420	No Tape	☐	☐	☐	☐	
Decoder 8	24.17	100%	24.170	24.170	24.170	24.170	No Tape	☐	☐	☐	☐	
Decoder 8	24.17	0%	0.086	0.090	0.096	0.095	No Tape	☐	☐	☐	☐	DC 2.5
Decoder 8	24.17	1%	0.082	0.086	0.091	0.092	No Tape	☐	☐	☐	☐	RGBW
Decoder 8	24.17	15%	24.550	24.550	24.550	24.550	No Tape	☐	☐	☐	☐	
Decoder 8	24.17	50%	24.490	24.490	24.490	24.490	No Tape	☐	☐	☐	☐	
Decoder 8	24.17	100%	24.170	24.170	24.170	24.170	No Tape	☐	☐	☐	☐	
Decoder 8	24.17	0%	0.089	0.092	0.086	0.086	No Tape	☐	☐	☐	☐	DC 3.5
Decoder 8	24.17	1%	0.106	0.109	0.112	0.111	No Tape	☐	☐	☐	☐	RGBW
Decoder 8	24.17	15%	16.340	24.540	24.530	24.540	No Tape	☐	☐	☐	☐	
Decoder 8	24.17	50%	24.520	24.510	24.520	24.510	No Tape	☐	☐	☐	☐	
Decoder 8	24.17	100%	24.170	24.170	24.170	24.170	No Tape	☐	☐	☐	☐	
Decoder 8	24.17	0%	0.194	0.194	0.186	0.190	No Tape	☐	☐	☐	☐	DC 6.5
Decoder 8	24.17	1%	0.158	0.155	0.159	0.158	No Tape	☐	☐	☐	☐	RGBW
Decoder 8	24.17	15%	0.159	0.161	0.166	0.165	No Tape	☐	☐	☐	☐	
Decoder 8	24.17	50%	24.550	24.550	24.550	24.550	No Tape	☐	☐	☐	☐	
Decoder 8	24.17	100%	24.170	24.170	24.170	24.170	No Tape	☐	☐	☐	☐	
Decoder 8	24.17	0%	0.091	0.093	0.099	0.099	No Tape	☐	☐	☐	☐	DC 9.9
Decoder 8	24.17	1%	0.099	0.096	0.099	0.098	No Tape	☐	☐	☐	☐	RGBW
Decoder 8	24.17	15%	0.106	0.105	0.110	0.111	No Tape	☐	☐	☐	☐	
Decoder 8	24.17	50%	0.818	24.490	1.055	24.540	No Tape	☐	☐	☐	☐	
Decoder 8	24.17	100%	24.170	24.170	24.170	24.170	No Tape	☐	☐	☐	☐	

Decoder #	In V@ Decoder	Percent	C1	C2	C3	C4	Tape #?	Turns on?				Notes
Decoder 8	12.01	0%	0.426	0.083	0.032	0.030	Tape 1	☐	☐	☐	☐	DC 0.1
Decoder 8	11.96	1%	8.750	9.400	9.401	10.650	Tape 1	☑	☑	☑	☑	RGBW
Decoder 8	11.95	5%	9.630	10.090	10.090	10.630	Tape 1	☑	☑	☑	☑	
Decoder 8	11.94	10%	10.100	10.460	10.470	10.900	Tape 1	☑	☑	☑	☑	
Decoder 8	11.94	15%	10.380	10.670	10.680	11.050	Tape 1	☑	☑	☑	☑	
Decoder 8	11.93	25%	10.760	10.980	10.990	11.270	Tape 1	☑	☑	☑	☑	
Decoder 8	11.93	50%	11.310	11.430	11.430	11.580	Tape 1	☑	☑	☑	☑	
Decoder 8	11.92	75%	11.650	11.700	11.700	11.770	Tape 1	☑	☑	☑	☑	
Decoder 8	11.92	100%	11.900	11.900	11.900	11.900	Tape 1	☑	☑	☑	☑	
Decoder 8	12.01	0%	0.640	0.112	0.032	0.026	Tape 1	☐	☐	☐	☐	DC 0.8
Decoder 8	12.01	1%	3.317	5.016	5.039	7.000	Tape 1	☑	☑	☑	☑	RGBW
Decoder 8	12.01	5%	3.930	5.475	5.518	7.381	Tape 1	☑	☑	☑	☑	
Decoder 8	12.00	10%	4.549	5.598	6.011	7.640	Tape 1	☑	☑	☑	☑	
Decoder 8	11.99	15%	5.056	6.354	6.418	7.920	Tape 1	☑	☑	☑	☑	
Decoder 8	11.98	25%	6.048	7.150	7.210	8.490	Tape 1	☑	☑	☑	☑	
Decoder 8	11.96	50%	8.990	8.880	8.930	9.750	Tape 1	☑	☑	☑	☑	
Decoder 8	11.94	75%	10.090	10.430	10.450	10.870	Tape 1	☑	☑	☑	☑	
Decoder 8	11.92	100%	11.900	11.900	11.900	11.900	Tape 1	☑	☑	☑	☑	
Decoder 8	12.01	0%	0.610	0.102	0.032	0.026	Tape 1	☐	☐	☐	☐	DC 1.0
Decoder 8	12.01	1%	3.091	4.956	4.350	6.990	Tape 1	☑	☑	☑	☑	RGBW
Decoder 8	12.01	5%	3.546	5.229	5.193	7.190	Tape 1	☑	☑	☑	☑	
Decoder 8	12.01	10%	4.051	5.600	5.589	7.440	Tape 1	☑	☑	☑	☑	
Decoder 8	12.00	15%	4.478	5.935	5.928	7.670	Tape 1	☑	☑	☑	☑	
Decoder 8	11.99	25%	5.360	6.650	6.650	8.180	Tape 1	☑	☑	☑	☑	
Decoder 8	11.97	50%	7.560	8.410	8.410	9.440	Tape 1	☑	☑	☑	☑	
Decoder 8	11.95	75%	9.710	10.130	10.140	10.670	Tape 1	☑	☑	☑	☑	
Decoder 8	11.92	100%	11.900	11.900	11.900	11.900	Tape 1	☑	☑	☑	☑	
Decoder 8	12.01	0%	0.582	0.100	0.029	0.024	Tape 1	☐	☐	☐	☐	DC 1.5 (factory)
Decoder 8	12.01	1%	3.550	5.753	6.576	6.890	Tape 1	☐	☑	☐	☑	RGBW
Decoder 8	12.01	2%	2.888	5.429	5.333	6.920	Tape 1	☑	☑	☑	☑	
Decoder 8	12.01	5%	3.095	4.936	4.937	6.960	Tape 1	☑	☑	☑	☑	
Decoder 8	12.01	10%	3.368	5.071	5.073	7.060	Tape 1	☑	☑	☑	☑	
Decoder 8	12.01	15%	3.613	5.227	5.261	7.150	Tape 1	☑	☑	☑	☑	
Decoder 8	12.00	25%	4.239	5.709	5.759	7.470	Tape 1	☑	☑	☑	☑	
Decoder 8	11.98	50%	6.273	7.340	7.380	8.640	Tape 1	☑	☑	☑	☑	
Decoder 8	11.95	75%	8.830	9.410	9.430	10.140	Tape 1	☑	☑	☑	☑	
Decoder 8	11.92	100%	11.900	11.900	11.900	11.900	Tape 1	☑	☑	☑	☑	
Decoder 8	12.01	0%	0.600	0.100	0.022	0.018	Tape 1	☐	☐	☐	☐	DC 2.5
Decoder 8	12.02	1%	0.584	0.095	0.040	0.035	Tape 1	☐	☐	☐	☐	RGBW
Decoder 8	12.02	5%	0.590	0.102	0.044	0.042	Tape 1	☐	☐	☐	☐	
Decoder 8	12.01	7%	3.588	5.774	6.596	6.910	Tape 1	☐	☑	☐	☑	
Decoder 8	12.01	8%	3.744	5.740	6.357	6.930	Tape 1	☑	☑	☑	☑	
Decoder 8	12.01	10%	2.700	5.232	5.360	6.950	Tape 1	☑	☑	☑	☑	
Decoder 8	12.01	15%	3.006	4.958	4.970	6.980	Tape 1	☑	☑	☑	☑	
Decoder 8	12.01	25%	3.351	5.093	5.072	7.090	Tape 1	☑	☑	☑	☑	
Decoder 8	12.00	50%	4.733	6.150	6.154	7.820	Tape 1	☑	☑	☑	☑	
Decoder 8	11.97	75%	7.420	8.300	8.300	9.360	Tape 1	☑	☑	☑	☑	
Decoder 8	11.92	100%	11.900	11.900	11.900	11.900	Tape 1	☑	☑	☑	☑	
Decoder 8	12.02	0%	0.606	0.100	0.030	0.025	Tape 1	☐	☐	☐	☐	DC 3.5
Decoder 8	12.02	1%	0.611	0.104	0.031	0.025	Tape 1	☐	☐	☐	☐	RGBW

Decoder #	In V@ Decoder	Percent	C1	C2	C3	C4	Tape #?	Turns on?				Notes
Decoder 8	12.02	5%	0.585	0.105	0.037	0.037	Tape 1	☐	☐	☐	☐	
Decoder 8	12.02	10%	0.566	0.092	0.027	0.021	Tape 1	☐	☐	☐	☐	
Decoder 8	12.02	15%	1.556	5.739	6.357	6.880	Tape 1	☐	☑	☐	☑	
Decoder 8	12.02	16%	3.805	5.728	6.421	6.900	Tape 1	☑	☑	☑	☑	
Decoder 8	12.01	25%	2.987	4.919	4.963	6.920	Tape 1	☑	☑	☑	☑	
Decoder 8	12.01	50%	3.905	5.467	5.496	7.310	Tape 1	☑	☑	☑	☑	
Decoder 8	11.98	75%	6.349	7.410	7.450	8.710	Tape 1	☑	☑	☑	☑	
Decoder 8	11.92	100%	11.900	11.900	11.900	11.900	Tape 1	☑	☑	☑	☑	
Decoder 8	12.02	0%	0.612	0.098	0.030	0.024	Tape 1	☐	☐	☐	☐	DC 6.5
Decoder 8	12.02	1%	0.629	0.105	0.035	0.028	Tape 1	☐	☐	☐	☐	RGBW
Decoder 8	12.02	5%	0.605	0.097	0.032	0.025	Tape 1	☐	☐	☐	☐	
Decoder 8	12.02	10%	0.604	0.100	0.036	0.033	Tape 1	☐	☐	☐	☐	
Decoder 8	12.02	15%	0.580	0.100	0.047	0.042	Tape 1	☐	☐	☐	☐	
Decoder 8	12.01	25%	0.580	0.094	0.030	0.024	Tape 1	☐	☐	☐	☐	
Decoder 8	12.01	36%	3.589	5.776	6.598	6.920	Tape 1	☐	☑	☐	☑	
Decoder 8	12.01	37%	3.965	5.764	6.554	6.920	Tape 1	☑	☑	☑	☑	
Decoder 8	12.01	50%	3.059	4.964	4.963	6.990	Tape 1	☑	☑	☑	☑	
Decoder 8	12.00	75%	4.486	5.977	5.972	7.700	Tape 1	☑	☑	☑	☑	
Decoder 8	11.92	100%	11.900	11.900	11.900	11.900	Tape 1	☑	☑	☑	☑	
Decoder 8	12.02	0%	0.579	0.096	0.032	0.027	Tape 1	☐	☐	☐	☐	DC 9.9
Decoder 8	12.02	1%	0.575	0.094	0.033	0.027	Tape 1	☐	☐	☐	☐	RGBW
Decoder 8	12.02	5%	0.632	0.102	0.032	0.028	Tape 1	☐	☐	☐	☐	
Decoder 8	12.02	10%	0.585	0.093	0.028	0.022	Tape 1	☐	☐	☐	☐	
Decoder 8	12.02	15%	0.590	0.099	0.034	0.029	Tape 1	☐	☐	☐	☐	
Decoder 8	12.02	25%	0.586	0.100	0.035	0.031	Tape 1	☐	☐	☐	☐	
Decoder 8	12.02	50%	0.593	5.450	0.332	6.840	Tape 1	☐	☐	☐	☑	
Decoder 8	12.02	51%	1.540	5.754	6.375	6.890	Tape 1	☐	☑	☐	☑	
Decoder 8	12.02	52%	3.890	5.742	6.494	6.900	Tape 1	☑	☑	☑	☑	
Decoder 8	12.01	75%	3.579	5.224	5.256	7.140	Tape 1	☑	☑	☑	☑	
Decoder 8	11.92	100%	11.900	11.900	11.900	11.900	Tape 1	☑	☑	☑	☑	
Decoder 8	24.48	0%	0.060	0.073	0.810	X	Tape 2	☐	☐	☐	X	DC 0.1
Decoder 8	24.48	1%	18.910	20.030	20.720	X	Tape 2	☑	☑	☑	X	RGB
Decoder 8	24.48	5%	20.490	21.300	21.790	X	Tape 2	☑	☑	☑	X	
Decoder 8	24.47	10%	21.320	21.970	22.350	X	Tape 2	☑	☑	☑	X	
Decoder 8	24.47	15%	21.800	22.360	22.680	X	Tape 2	☑	☑	☑	X	
Decoder 8	24.47	25%	22.500	22.910	23.150	X	Tape 2	☑	☑	☑	X	
Decoder 8	24.47	50%	23.470	23.680	23.800	X	Tape 2	☑	☑	☑	X	
Decoder 8	24.47	75%	24.060	24.150	24.200	X	Tape 2	☑	☑	☑	X	
Decoder 8	24.47	100%	24.47	24.47	24.47	X	Tape 2	☑	☑	☑	X	
Decoder 8	24.47	0%	0.057	0.072	0.052	X	Tape 2	☐	☐	☐	X	DC 0.8
Decoder 8	24.47	1%	8.940	12.020	13.930	X	Tape 2	☑	☑	☑	X	RGB
Decoder 8	24.47	5%	10.000	12.880	14.660	X	Tape 2	☑	☑	☑	X	
Decoder 8	24.47	10%	11.110	13.780	15.420	X	Tape 2	☑	☑	☑	X	
Decoder 8	24.47	15%	12.040	14.530	16.060	X	Tape 2	☑	☑	☑	X	
Decoder 8	24.47	25%	13.840	15.990	17.290	X	Tape 2	☑	☑	☑	X	
Decoder 8	24.47	50%	17.790	19.150	19.970	X	Tape 2	☑	☑	☑	X	
Decoder 8	24.47	75%	21.260	21.950	22.330	X	Tape 2	☑	☑	☑	X	
Decoder 8	24.47	100%	24.470	24.470	24.470	X	Tape 2	☑	☑	☑	X	
Decoder 8	24.47	0%	0.048	0.061	0.046	X	Tape 2	☐	☐	☐	X	DC 1.0
Decoder 8	24.47	1%	8.730	11.830	13.780	X	Tape 2	☑	☑	☑	X	RGB

Decoder #	In V@ Decoder	Percent	C1	C2	C3	C4	Tape #?	Turns on?				Notes
Decoder 8	24.47	5%	9.390	12.360	13.230	X	Tape 2	☑	☑	☑	X	
Decoder 8	24.46	10%	10.240	13.040	14.810	X	Tape 2	☑	☑	☑	X	
Decoder 8	24.46	15%	11.010	13.670	15.340	X	Tape 2	☑	☑	☑	X	
Decoder 8	24.46	25%	12.660	15.000	16.460	X	Tape 2	☑	☑	☑	X	
Decoder 8	24.46	50%	16.680	18.240	19.200	X	Tape 2	☑	☑	☑	X	
Decoder 8	24.46	75%	20.500	21.470	21.850	X	Tape 2	☑	☑	☑	X	
Decoder 8	24.46	100%	24.450	24.460	24.460	X	Tape 2	☑	☑	☑	X	
Decoder 8	24.46	0%	0.053	0.081	0.061	X	Tape 2	☐	☐	☐	X	DC 1.5 (factory)
Decoder 8	24.46	1%	8.390	11.630	13.590	X	Tape 2	☐	☑	☑	X	RGB
Decoder 8	24.46	2%	8.540	11.690	13.650	X	Tape 2	☑	☑	☑	X	
Decoder 8	24.46	5%	8.690	11.810	13.750	X	Tape 2	☑	☑	☑	X	
Decoder 8	24.47	10%	9.040	12.090	13.990	X	Tape 2	☑	☑	☑	X	
Decoder 8	24.46	15%	9.450	12.420	14.270	X	Tape 2	☑	☑	☑	X	
Decoder 8	24.46	25%	10.560	13.320	15.040	X	Tape 2	☑	☑	☑	X	
Decoder 8	24.46	50%	14.280	16.330	17.580	X	Tape 2	☑	☑	☑	X	
Decoder 8	24.46	75%	18.970	20.090	20.760	X	Tape 2	☑	☑	☑	X	
Decoder 8	24.46	100%	24.460	24.460	24.460	X	Tape 2	☑	☑	☑	X	
Decoder 8	24.46	0%	0.055	0.067	0.051	X	Tape 2	☐	☐	☐	X	DC 2.5
Decoder 8	24.46	1%	0.081	0.094	0.075	X	Tape 2	☐	☐	☐	X	RGB
Decoder 8	24.46	5%	0.085	0.224	0.117	X	Tape 2	☐	☐	☐	X	
Decoder 8	24.46	7%	8.450	11.660	13.620	X	Tape 2	☐	☑	☑	X	
Decoder 8	24.46	8%	8.530	11.680	13.640	X	Tape 2	☑	☑	☑	X	
Decoder 8	24.46	10%	8.600	11.730	13.690	X	Tape 2	☑	☑	☑	X	
Decoder 8	24.46	15%	8.710	11.810	13.760	X	Tape 2	☑	☑	☑	X	
Decoder 8	24.46	25%	9.100	12.120	14.020	X	Tape 2	☑	☑	☑	X	
Decoder 8	24.46	50%	11.520	14.070	15.680	X	Tape 2	☑	☑	☑	X	
Decoder 8	24.46	75%	16.410	18.030	19.020	X	Tape 2	☑	☑	☑	X	
Decoder 8	24.45	100%	24.450	24.450	24.450	X	Tape 2	☑	☑	☑	X	
Decoder 8	24.46	0%	0.072	0.090	0.068	X	Tape 2	☐	☐	☐	X	DC 3.5
Decoder 8	24.46	1%	0.065	0.080	0.061	X	Tape 2	☐	☐	☐	X	RGB
Decoder 8	24.46	5%	0.080	0.100	0.071	X	Tape 2	☐	☐	☐	X	
Decoder 8	24.46	10%	0.070	0.092	0.071	X	Tape 2	☐	☐	☐	X	
Decoder 8	24.46	15%	6.260	11.680	13.630	X	Tape 2	☐	☑	☑	X	
Decoder 8	24.46	16%	8.500	11.670	13.630		Tape 2	☑	☑	☑		
Decoder 8	24.46	25%	8.630	11.760	13.720	X	Tape 2	☑	☑	☑	X	
Decoder 8	24.46	50%	9.990	12.860	14.650	X	Tape 2	☑	☑	☑	X	
Decoder 8	24.46	75%	14.440	16.450	17.680	X	Tape 2	☑	☑	☑	X	
Decoder 8	24.45	100%	24.45	24.45	24.45	X	Tape 2	☑	☑	☑	X	
Decoder 8	24.46	0%	0.068	0.088	0.066	X	Tape 2	☐	☐	☐	X	DC 6.5
Decoder 8	24.46	1%	0.075	0.094	0.075	X	Tape 2	☐	☐	☐	X	RGB
Decoder 8	24.46	5%	0.072	0.088	0.068	X	Tape 2	☐	☐	☐	X	
Decoder 8	24.46	10%	0.075	0.092	0.072	X	Tape 2	☐	☐	☐	X	
Decoder 8	24.46	15%	0.078	0.094	0.076	X	Tape 2	☐	☐	☐	X	
Decoder 8	24.46	25%	0.069	0.083	0.065	X	Tape 2	☐	☐	☐	X	
Decoder 8	24.46	35%	0.949	11.700	1.007	X	Tape 2	☐	☑	☐	X	
Decoder 8	24.46	36%	8.470	11.670	13.630	X	Tape 2	☐	☑	☑	X	
Decoder 8	24.46	37%	8.520	11.680	13.640	X	Tape 2	☑	☑	☑	X	
Decoder 8	24.46	50%	8.760	11.850	13.790	X	Tape 2	☑	☑	☑	X	
Decoder 8	24.46	75%	11.100	13.730	15.390	X	Tape 2	☑	☑	☑	X	
Decoder 8	24.45	100%	24.450	24.450	24.450	X	Tape 2	☑	☑	☑	X	

Decoder #	In V@ Decoder	Percent	C1	C2	C3	C4	Tape #?	Turns on?				Notes
Decoder 8	24.46	0%	0.076	0.090	0.072	X	Tape 2	☐	☐	☐	X	DC 9.9
Decoder 8	24.46	1%	0.080	0.106	0.080	X	Tape 2	☐	☐	☐	X	RGB
Decoder 8	24.46	5%	0.072	0.084	0.066	X	Tape 2	☐	☐	☐	X	
Decoder 8	24.46	10%	0.072	0.080	0.064	X	Tape 2	☐	☐	☐	X	
Decoder 8	24.46	15%	0.067	0.085	0.065	X	Tape 2	☐	☐	☐	X	
Decoder 8	24.46	25%	0.073	0.090	0.068	X	Tape 2	☐	☐	☐	X	
Decoder 8	24.46	50%	0.960	11.680	1.019	X	Tape 2	☐	☑	☐	X	
Decoder 8	24.46	51%	6.190	11.690	13.640	X	Tape 2	☐	☑	☑	X	
Decoder 8	24.46	52%	8.510	11.670	13.630	X	Tape 2	☑	☑	☑	X	
Decoder 8	24.46	75%	9.440	12.420	14.280	X	Tape 2	☑	☑	☑	X	
Decoder 8	24.45	100%	24.450	24.450	24.450	X	Tape 2	☑	☑	☑	X	
Decoder 8	12.01	0%	0.016	0.020	0.026	X	Tape 3-5	☐	☐	☐	X	DC 0.1
Decoder 8	11.92	1%	10.750	10.050	8.950	X	Tape 3-5	☑	☑	☑	X	RGBW
Decoder 8	11.90	5%	11.050	10.550	9.750	X	Tape 3-5	☑	☑	☑	X	
Decoder 8	11.89	10%	11.210	10.810	10.170	X	Tape 3-5	☑	☑	☑	X	
Decoder 8	11.89	15%	11.300	10.960	10.401	X	Tape 3-5	☑	☑	☑	X	
Decoder 8	11.88	25%	11.420	11.180	10.760	X	Tape 3-5	☑	☑	☑	X	
Decoder 8	11.87	50%	11.610	11.480	11.260	X	Tape 3-5	☑	☑	☑	X	
Decoder 8	11.87	75%	11.720	11.660	11.560	X	Tape 3-5	☑	☑	☑	X	
Decoder 8	11.86	100%	11.820	11.810	11.810	X	Tape 3-5	☑	☑	☑	X	
Decoder 8	12.01	0%	0.018	0.022	0.262	X	Tape 3-5	☐	☐	☐	X	DC 0.8
Decoder 8	12.01	1%	8.800	6.980	4.095	X	Tape 3-5	☑	☑	☑	X	RGBW
Decoder 8	12.00	5%	8.980	7.300	4.602	X	Tape 3-5	☑	☑	☑	X	
Decoder 8	11.99	10%	9.190	7.640	5.156	X	Tape 3-5	☑	☑	☑	X	
Decoder 8	11.96	15%	9.710	8.500	6.507	X	Tape 3-5	☑	☑	☑	X	
Decoder 8	11.96	25%	9.710	8.500	6.505	X	Tape 3-5	☑	☑	☑	X	
Decoder 8	11.93	50%	10.150	9.720	8.450	X	Tape 3-5	☑	☑	☑	X	
Decoder 8	11.89	75%	11.190	10.800	10.160	X	Tape 3-5	☑	☑	☑	X	
Decoder 8	11.86	100%	11.830	8.200	8.200	X	Tape 3-5	☑	☑	☑	X	
Decoder 8	12.02	0%	0.023	0.025	0.260	X	Tape 3-5	☐	☐	☐	X	DC 1.0
Decoder 8	12.01	1%	9.000	6.940	4.013	X	Tape 3-5	☑	☑	☑	X	RGBW
Decoder 8	12.01	5%	9.070	7.130	4.293	X	Tape 3-5	☑	☑	☑	X	
Decoder 8	12.00	10%	9.210	7.390	4.712	X	Tape 3-5	☑	☑	☑	X	
Decoder 8	11.99	15%	9.350	7.620	5.090	X	Tape 3-5	☑	☑	☑	X	
Decoder 8	11.98	25%	9.650	8.130	5.891	X	Tape 3-5	☑	☑	☑	X	
Decoder 8	11.94	50%	10.390	9.380	7.880	X	Tape 3-5	☑	☑	☑	X	
Decoder 8	11.90	75%	11.100	10.590	9.810	X	Tape 3-5	☑	☑	☑	X	
Decoder 8	11.86	100%	11.830	8.200	8.200	X	Tape 3-5	☑	☑	☑	X	
Decoder 8	12.02	0%	0.027	0.031	0.264	X	Tape 3-5	☐	☐	☐	X	DC 1.5 (factory)
Decoder 8	12.02	1%	4.800	6.870	4.006	X	Tape 3-5	☐	☑	☐	X	RGBW
Decoder 8	12.02	2%	8.970	6.900	3.004	X	Tape 3-5	☑	☑	☑	X	
Decoder 8	12.01	5%	8.900	6.930	4.093	X	Tape 3-5	☑	☑	☑	X	
Decoder 8	12.01	10%	8.920	7.030	4.155	X	Tape 3-5	☑	☑	☑	X	
Decoder 8	12.01	15%	8.970	7.150	4.351	X	Tape 3-5	☑	☑	☑	X	
Decoder 8	12.00	25%	9.170	7.490	4.901	X	Tape 3-5	☑	☑	☑	X	
Decoder 8	11.96	50%	9.880	8.640	6.730	X	Tape 3-5	☑	☑	☑	X	
Decoder 8	11.92	75%	10.780	10.090	9.030	X	Tape 3-5	☑	☑	☑	X	
Decoder 8	11.85	100%	11.830	11.820	11.820	X	Tape 3-5	☑	☑	☑	X	
Decoder 8	12.01	0%	0.017	0.021	0.289	X	Tape 3-5	☐	☐	☐	X	DC 2.5
Decoder 8	12.02	1%	0.030	0.027	0.292	X	Tape 3-5	☐	☐	☐	X	RGBW

Decoder #	In V@ Decoder	Percent	C1	C2	C3	C4	Tape #?	Turns on?				Notes
Decoder 8	12.02	5%	0.040	0.041	0.290	X	Tape 3-5	☐	☐	☐	X	
Decoder 8	12.02	7%	0.477	6.890	4.036	X	Tape 3-5	☐	☑	☐	X	tape 4 on
Decoder 8	12.02	8%	8.990	6.920	4.068	X	Tape 3-5	☑	☑	☑	X	tape 3 and 5 on
Decoder 8	12.02	10%	9.050	6.920	3.159	X	Tape 3-5	☑	☑	☑	X	
Decoder 8	12.02	15%	9.060	6.940	4.118	X	Tape 3-5	☑	☑	☑	X	
Decoder 8	12.01	25%	9.070	7.050	4.169	X	Tape 3-5	☑	☑	☑	X	
Decoder 8	11.99	50%	9.490	7.780	5.347	X	Tape 3-5	☑	☑	☑	X	
Decoder 8	11.94	75%	10.370	9.300	7.760	X	Tape 3-5	☑	☑	☑	X	
Decoder 8	11.86	100%	11.830	11.820	11.820	X	Tape 3-5	☑	☑	☑	X	
Decoder 8	12.02	0%	0.030	0.029	0.300	X	Tape 3-5	☐	☐	☐	X	DC 3.5
Decoder 8	12.02	1%	0.017	0.020	0.290	X	Tape 3-5	☐	☐	☐	X	RGBW
Decoder 8	12.02	5%	0.031	0.032	0.293	X	Tape 3-5	☐	☐	☐	X	
Decoder 8	12.01	10%	0.030	0.030	0.300	X	Tape 3-5	☐	☐	☐	X	
Decoder 8	12.02	15%	0.086	6.850	3.854	X	Tape 3-5	☐	☑	☐	X	tape 4 on
Decoder 8	12.02	16%	8.850	6.900	4.054	X	Tape 3-5	☑	☑	☑	X	tape 3 and 5 on
Decoder 8	12.01	25%	8.850	6.920	4.091	X	Tape 3-5	☑	☑	☑	X	
Decoder 8	12.00	50%	9.010	7.310	4.604	X	Tape 3-5	☑	☑	☑	X	
Decoder 8	11.96	75%	9.870	8.680	6.780	X	Tape 3-5	☑	☑	☑	X	
Decoder 8	11.86	100%	11.830	11.820	11.820	X	Tape 3-5	☑	☑	☑	X	
Decoder 8	12.02	0%	0.027	0.026	0.295	X	Tape 3-5	☐	☐	☐	X	DC 6.5
Decoder 8	12.02	1%	0.019	0.020	0.300	X	Tape 3-5	☐	☐	☐	X	RGBW
Decoder 8	12.02	5%	0.026	0.025	0.299	X	Tape 3-5	☐	☐	☐	X	
Decoder 8	12.02	10%	0.022	0.022	0.297	X	Tape 3-5	☐	☐	☐	X	
Decoder 8	12.02	15%	0.018	0.021	0.299	X	Tape 3-5	☐	☐	☐	X	
Decoder 8	12.02	25%	0.016	0.019	0.300	X	Tape 3-5	☐	☐	☐	X	
Decoder 8	12.02	36%	4.797	6.910	4.064	X	Tape 3-5	☐	☑	☐	X	tape 4 on
Decoder 8	12.02	37%	8.680	6.930	4.092	X	Tape 3-5	☑	☑	☑	X	tape 3 and 5 on
Decoder 8	12.01	50%	9.080	6.970	4.148	X	Tape 3-5	☑	☑	☑	X	
Decoder 8	11.99	75%	9.400	7.660	5.138	X	Tape 3-5	☑	☑	☑	X	
Decoder 8	11.86	100%	11.830	8.200	8.200	X	Tape 3-5	☑	☑	☑	X	
Decoder 8	12.02	0%	0.007	0.009	0.297	X	Tape 3-5	☐	☐	☐	X	DC 9.9
Decoder 8	12.02	1%	0.016	0.018	0.295	X	Tape 3-5	☐	☐	☐	X	RGBW
Decoder 8	12.02	5%	0.012	0.014	0.300	X	Tape 3-5	☐	☐	☐	X	
Decoder 8	12.02	10%	0.020	0.018	0.300	X	Tape 3-5	☐	☐	☐	X	
Decoder 8	12.02	15%	0.013	0.015	0.300	X	Tape 3-5	☐	☐	☐	X	
Decoder 8	12.02	25%	0.021	0.022	0.300	X	Tape 3-5	☐	☐	☐	X	
Decoder 8	12.02	50%	0.066	6.096	0.340	X	Tape 3-5	☐	☐	☐	X	
Decoder 8	12.02	51%	0.888	6.888	3.897	X	Tape 3-5	☐	☑	☐	X	tape 4 on
Decoder 8	12.02	53%	9.020	6.920	4.071	X	Tape 3-5	☑	☑	☑	X	tape 3 and 5 on
Decoder 8	12.01	75%	9.040	7.180	7.180	X	Tape 3-5	☑	☑	☑	X	
Decoder 8	11.86	100%	11.830	11.820	11.820	X	Tape 3-5	☑	☑	☑	X	
Decoder 8	24.16	0%	0.400	0.146	0.155	0.174	Tape 6	☐	☐	☐	☐	DC 0.1
Decoder 8	24.06	1%	17.900	19.060	19.040	20.470	Tape 6	☑	☑	☑	☑	RGBW
Decoder 8	24.04	5%	19.580	20.420	20.420	21.470	Tape 6	☑	☑	☑	☑	
Decoder 8	24.03	10%	20.500	21.160	21.160	22.000	Tape 6	☑	☑	☑	☑	
Decoder 8	24.02	15%	21.020	21.580	21.580	22.300	Tape 6	☑	☑	☑	☑	
Decoder 8	24.01	25%	21.780	22.200	22.200	22.750	Tape 6	☑	☑	☑	☑	
Decoder 8	24.00	50%	22.860	23.070	23.070	23.360	Tape 6	☑	☑	☑	☑	
Decoder 8	23.99	75%	23.510	23.590	23.600	23.730	Tape 6	☑	☑	☑	☑	
Decoder 8	23.98	100%	23.970	23.970	23.970	23.970	Tape 6	☑	☑	☑	☑	

Decoder #	In V@ Decoder	Percent	C1	C2	C3	C4	Tape #?	Turns on?				Notes
Decoder 8	24.16	0%	0.401	0.167	0.173	0.205	Tape 6	☐	☐	☐	☐	DC 0.8
Decoder 8	24.15	1%	7.390	10.600	10.540	14.330	Tape 6	☑	☑	☑	☑	RGBW
Decoder 8	24.14	5%	8.530	11.510	11.440	14.960	Tape 6	☑	☑	☑	☑	
Decoder 8	24.13	10%	9.710	12.450	12.390	15.640	Tape 6	☑	☑	☑	☑	
Decoder 8	24.12	15%	10.650	13.230	13.180	16.210	Tape 6	☑	☑	☑	☑	
Decoder 8	24.11	25%	12.570	14.760	14.710	17.320	Tape 6	☑	☑	☑	☑	
Decoder 8	24.07	50%	16.720	18.110	18.100	17.790	Tape 6	☑	☑	☑	☑	
Decoder 8	24.04	75%	20.450	21.120	21.120	21.970	Tape 6	☑	☑	☑	☑	
Decoder 8	23.99	100%	23.980	23.970	23.980	23.980	Tape 6	☑	☑	☑	☑	
Decoder 8	24.17	0%	0.420	0.165	0.165	0.194	Tape 6	☐	☐	☐	☐	DC 1.0
Decoder 8	24.17	1%	7.130	10.420	10.390	14.180	Tape 6	☑	☑	☑	☑	RGBW
Decoder 8	24.16	5%	7.850	10.960	10.890	14.570	Tape 6	☑	☑	☑	☑	
Decoder 8	24.15	10%	8.740	11.670	11.600	15.080	Tape 6	☑	☑	☑	☑	
Decoder 8	24.14	15%	9.560	12.330	12.270	15.550	Tape 6	☑	☑	☑	☑	
Decoder 8	24.13	25%	11.280	13.730	13.680	16.570	Tape 6	☑	☑	☑	☑	
Decoder 8	24.08	50%	15.510	17.140	17.110	19.070	Tape 6	☑	☑	☑	☑	
Decoder 8	24.04	75%	19.700	20.520	20.520	21.540	Tape 6	☑	☑	☑	☑	
Decoder 8	23.99	100%	23.980	23.970	23.970	23.970	Tape 6	☑	☑	☑	☑	
Decoder 8	24.17	0%	0.435	0.150	0.150	0.195	Tape 6	☐	☐	☐	☐	DC 1.5 (factory)
Decoder 8	24.17	1%	6.250	11.920	12.220	13.980	Tape 6	☐	☑	☑	☑	RGBW
Decoder 8	24.17	2%	7.600	11.070	11.230	14.040	Tape 6	☑	☑	☑	☑	
Decoder 8	24.16	5%	7.130	10.420	10.390	14.180	Tape 6	☑	☑	☑	☑	
Decoder 8	24.16	10%	7.510	10.690	10.620	14.390	Tape 6	☑	☑	☑	☑	
Decoder 8	24.16	15%	7.960	11.050	10.980	14.640	Tape 6	☑	☑	☑	☑	
Decoder 8	24.14	25%	9.010	12.010	11.940	15.320	Tape 6	☑	☑	☑	☑	
Decoder 8	24.11	50%	13.070	15.160	15.120	17.620	Tape 6	☑	☑	☑	☑	
Decoder 8	24.05	75%	18.000	19.150	19.140	20.550	Tape 6	☑	☑	☑	☑	
Decoder 8	23.99	100%	23.970	23.970	23.970	23.970	Tape 6	☑	☑	☑	☑	
Decoder 8	24.17	0%	0.430	0.141	0.167	0.192	Tape 6	☐	☐	☐	☐	DC 2.5
Decoder 8	24.17	1%	0.445	0.161	0.165	0.191	Tape 6	☐	☐	☐	☐	RGBW
Decoder 8	24.17	5%	0.430	0.180	0.186	0.216	Tape 6	☐	☐	☐	☐	
Decoder 8	24.17	7%	6.245	11.920	12.220	13.980	Tape 6	☐	☑	☑	☑	
Decoder 8	24.17	8%	8.090	11.620	12.010	14.010	Tape 6	☑	☑	☑	☑	
Decoder 8	24.17	10%	7.400	10.940	11.420	14.060	Tape 6	☑	☑	☑	☑	
Decoder 8	24.16	15%	7.090	10.450	10.440	14.150	Tape 6	☑	☑	☑	☑	
Decoder 8	24.16	25%	7.470	10.650	10.590	14.360	Tape 6	☑	☑	☑	☑	
Decoder 8	24.14	50%	10.080	12.750	12.690	15.860	Tape 6	☑	☑	☑	☑	
Decoder 8	24.09	75%	15.180	16.860	16.830	18.860	Tape 6	☑	☑	☑	☑	
Decoder 8	24.00	100%	23.980	23.980	23.980	23.980	Tape 6	☑	☑	☑	☑	
Decoder 8	24.17	0%	0.366	0.202	0.211	0.246	Tape 6	☐	☐	☐	☐	DC 3.5
Decoder 8	24.17	5%	0.375	0.206	0.214	0.250	Tape 6	☐	☐	☐	☐	
Decoder 8	24.17	10%	0.350	0.191	0.200	0.235	Tape 6	☐	☐	☐	☐	
Decoder 8	24.17	14%	0.386	11.630	0.698	13.990	Tape 6	☐	☑	☐	☑	
Decoder 8	24.17	15%	2.603	11.930	11.920	13.980	Tape 6	☐	☑	☑	☑	
Decoder 8	24.17	15%	8.140	11.670	12.100	14.010	Tape 6	☑	☑	☑	☑	
Decoder 8	24.16	25%	7.100	10.470	10.480	14.140	Tape 6	☑	☑	☑	☑	
Decoder 8	24.15	50%	8.540	11.510	11.450	14.970	Tape 6	☑	☑	☑	☑	
Decoder 8	24.11	75%	13.240	15.290	15.250	17.710	Tape 6	☑	☑	☑	☑	
Decoder 8	24.00	100%	23.980	23.980	23.980	23.990	Tape 6	☑	☑	☑	☑	
Decoder 8	24.17	0%	0.363	0.196	0.216	0.251	Tape 6	☐	☐	☐	☐	DC 6.5

Decoder #	In V@ Decoder	Percent	C1	C2	C3	C4	Tape #?	Turns on?				Notes
Decoder 8	24.17	1%	0.366	0.206	0.212	0.206	Tape 6	☐	☐	☐	☐	RGBW
Decoder 8	24.17	5%	0.360	0.186	0.196	0.236	Tape 6	☐	☐	☐	☐	
Decoder 8	24.17	10%	0.365	0.190	0.198	0.232	Tape 6	☐	☐	☐	☐	
Decoder 8	24.17	15%	0.367	0.195	0.204	0.242	Tape 6	☐	☐	☐	☐	
Decoder 8	24.17	25%	0.372	0.165	0.171	0.200	Tape 6	☐	☐	☐	☐	
Decoder 8	24.17	35%	0.379	11.640	0.695	13.990	Tape 6	☐	☑	☐	☑	
Decoder 8	24.17	36%	6.250	11.920	12.230	13.990	Tape 6	☑	☑	☑	☑	
Decoder 8	24.16	50%	7.120	10.420	10.390	14.180	Tape 6	☑	☑	☑	☑	
Decoder 8	24.14	75%	9.480	12.280	12.230	15.540	Tape 6	☑	☑	☑	☑	
Decoder 8	24.02	100%	24.000	24.000	24.000	24.000	Tape 6	☑	☑	☑	☑	
Decoder 8	24.17	0%	0.361	0.170	0.177	0.204	Tape 6	☐	☐	☐	☐	DC 9.9
Decoder 8	24.17	1%	0.365	0.172	0.179	0.211	Tape 6	☐	☐	☐	☐	RGBW
Decoder 8	24.17	5%	0.376	0.120	0.122	0.180	Tape 6	☐	☐	☐	☐	
Decoder 8	24.17	10%	0.376	0.155	0.165	0.190	Tape 6	☐	☐	☐	☐	
Decoder 8	24.17	15%	0.376	0.158	0.161	0.190	Tape 6	☐	☐	☐	☐	
Decoder 8	24.17	25%	0.377	0.153	0.155	0.158	Tape 6	☐	☐	☐	☐	
Decoder 8	24.17	50%	0.400	11.630	0.690	14.000	Tape 6	☐	☑	☐	☑	
Decoder 8	24.17	52%	8.160	11.720	12.190	14.010	Tape 6	☑	☑	☑	☑	
Decoder 8	24.16	75%	7.970	11.050	10.980	14.640	Tape 6	☑	☑	☑	☑	
Decoder 8	24.03	100%	24.000	24.000	24.000	24.000	Tape 6	☑	☑	☑	☑	
Decoder 8	12.01	0%	0.004	X	X	X	Tape 7	☐	X	X	X	DC 0.1
Decoder 8	11.98	1%	10.170	X	X	X	Tape 7	☑	X	X	X	
Decoder 8	11.97	5%	10.650	X	X	X	Tape 7	☑	X	X	X	
Decoder 8	11.97	10%	10.920	X	X	X	Tape 7	☑	X	X	X	
Decoder 8	11.97	15%	11.070	X	X	X	Tape 7	☑	X	X	X	
Decoder 8	11.97	25%	11.300	X	X	X	Tape 7	☑	X	X	X	
Decoder 8	11.96	50%	11.610	X	X	X	Tape 7	☑	X	X	X	
Decoder 8	11.96	75%	11.800	X	X	X	Tape 7	☑	X	X	X	
Decoder 8	11.96	100%	11.940	X	X	X	Tape 7	☑	X	X	X	
Decoder 8	12.01	0%	0.004	X	X	X	Tape 7	☐	X	X	X	DC 0.8
Decoder 8	12.01	1%	7.000	X	X	X	Tape 7	☑	X	X	X	
Decoder 8	12.00	5%	7.360	X	X	X	Tape 7	☑	X	X	X	
Decoder 8	12.00	10%	7.720	X	X	X	Tape 7	☑	X	X	X	
Decoder 8	12.00	15%	8.010	X	X	X	Tape 7	☑	X	X	X	
Decoder 8	11.99	25%	8.580	X	X	X	Tape 7	☑	X	X	X	
Decoder 8	11.98	50%	9.830	X	X	X	Tape 7	☑	X	X	X	
Decoder 8	11.97	75%	10.910	X	X	X	Tape 7	☑	X	X	X	
Decoder 8	11.96	100%	11.940	X	X	X	Tape 7	☑	X	X	X	
Decoder 8	12.01	0%	0.005	X	X	X	Tape 7	☐	X	X	X	DC 1.0
Decoder 8	12.01	1%	6.920	X	X	X	Tape 7	☑	X	X	X	
Decoder 8	12.01	5%	7.120	X	X	X	Tape 7	☑	X	X	X	
Decoder 8	12.00	10%	7.360	X	X	X	Tape 7	☑	X	X	X	
Decoder 8	12.00	15%	7.590	X	X	X	Tape 7	☑	X	X	X	
Decoder 8	11.99	25%	8.100	X	X	X	Tape 7	☑	X	X	X	
Decoder 8	11.98	50%	9.400	X	X	X	Tape 7	☑	X	X	X	
Decoder 8	11.97	75%	10.670	X	X	X	Tape 7	☑	X	X	X	
Decoder 8	11.96	100%	11.940	X	X	X	Tape 7	☑	X	X	X	
Decoder 8	12.01	0%	0.005	X	X	X	Tape 7	☐	X	X	X	DC 1.5 (factory)
Decoder 8	12.01	1%	6.750	X	X	X	Tape 7	☑	X	X	X	
Decoder 8	12.01	5%	6.960	X	X	X	Tape 7	☑	X	X	X	

Decoder #	In V@ Decoder	Percent	C1	C2	C3	C4	Tape #?	Turns on?				Notes
Decoder 8	12.01	10%	7.080	X	X	X	Tape 7	☑	X	X	X	
Decoder 8	12.00	15%	7.200	X	X	X	Tape 7	☑	X	X	X	
Decoder 8	12.00	25%	7.540	X	X	X	Tape 7	☑	X	X	X	
Decoder 8	11.98	50%	8.710	X	X	X	Tape 7	☑	X	X	X	
Decoder 8	11.97	75%	10.180	X	X	X	Tape 7	☑	X	X	X	
Decoder 8	11.94	100%	11.930	X	X	X	Tape 7	☑	X	X	X	
Decoder 8	12.01	0%	0.020	X	X	X	Tape 7	☐	X	X	X	DC 2.5
Decoder 8	12.01	1%	0.027	X	X	X	Tape 7	☐	X	X	X	
Decoder 8	12.01	5%	0.020	X	X	X	Tape 7	☐	X	X	X	
Decoder 8	12.01	6%	0.048	X	X	X	Tape 7	☐	X	X	X	
Decoder 8	12.01	7%	6.760	X	X	X	Tape 7	☑	X	X	X	
Decoder 8	12.01	10%	6.860	X	X	X	Tape 7	☑	X	X	X	
Decoder 8	12.01	15%	6.880	X	X	X	Tape 7	☑	X	X	X	
Decoder 8	12.00	25%	6.960	X	X	X	Tape 7	☑	X	X	X	
Decoder 8	12.00	50%	7.710	X	X	X	Tape 7	☑	X	X	X	
Decoder 8	11.98	75%	9.290	X	X	X	Tape 7	☑	X	X	X	
Decoder 8	11.94	100%	11.920	X	X	X	Tape 7	☑	X	X	X	
Decoder 8	12.01	0%	0.010	X	X	X	Tape 7	☐	X	X	X	DC 3.5
Decoder 8	12.01	1%	0.010	X	X	X	Tape 7	☐	X	X	X	
Decoder 8	12.01	5%	0.013	X	X	X	Tape 7	☐	X	X	X	
Decoder 8	12.01	7%	6.690	X	X	X	Tape 7	☑	X	X	X	
Decoder 8	12.01	10%	6.930	X	X	X	Tape 7	☑	X	X	X	
Decoder 8	12.01	15%	6.950	X	X	X	Tape 7	☑	X	X	X	
Decoder 8	12.01	25%	7.070	X	X	X	Tape 7	☑	X	X	X	
Decoder 8	12.00	50%	7.820	X	X	X	Tape 7	☑	X	X	X	
Decoder 8	11.98	75%	9.380	X	X	X	Tape 7	☑	X	X	X	
Decoder 8	11.95	100%	11.930	X	X	X	Tape 7	☑	X	X	X	
Decoder 8	12.01	0%	0.012	X	X	X	Tape 7	☐	X	X	X	DC 6.5
Decoder 8	12.01	1%	0.012	X	X	X	Tape 7	☐	X	X	X	
Decoder 8	12.01	5%	0.012	X	X	X	Tape 7	☐	X	X	X	
Decoder 8	12.01	10%	0.013	X	X	X	Tape 7	☐	X	X	X	
Decoder 8	12.01	15%	6.223	X	X	X	Tape 7	☐	X	X	X	
Decoder 8	12.01	16%	6.900	X	X	X	Tape 7	☑	X	X	X	
Decoder 8	12.01	25%	6.910	X	X	X	Tape 7	☑	X	X	X	
Decoder 8	12.00	50%	7.330	X	X	X	Tape 7	☑	X	X	X	
Decoder 8	11.99	75%	8.700	X	X	X	Tape 7	☑	X	X	X	
Decoder 8	11.95	100%	11.930	X	X	X	Tape 7	☑	X	X	X	
Decoder 8	12.01	0%	0.034	X	X	X	Tape 7	☐	X	X	X	DC 9.9
Decoder 8	12.01	1%	0.035	X	X	X	Tape 7	☐	X	X	X	
Decoder 8	12.01	5%	0.034	X	X	X	Tape 7	☐	X	X	X	
Decoder 8	12.01	10%	0.034	X	X	X	Tape 7	☐	X	X	X	
Decoder 8	12.01	15%	0.034	X	X	X	Tape 7	☐	X	X	X	
Decoder 8	12.01	25%	0.033	X	X	X	Tape 7	☐	X	X	X	
Decoder 8	12.01	50%	0.253	X	X	X	Tape 7	☐	X	X	X	
Decoder 8	12.01	52%	6.910	X	X	X	Tape 7	☑	X	X	X	
Decoder 8	12.00	75%	7.200	X	X	X	Tape 7	☑	X	X	X	
Decoder 8	11.94	100%	11.930	X	X	X	Tape 7	☑	X	X	X	
Decoder 8	12.01	0%	0.040	0.038	X	X	Tape 8	☐	☐	X	X	DC 0.1
Decoder 8	11.99	1%	10.180	10.150	X	X	Tape 8	☑	☑	X	X	
Decoder 8	11.99	5%	10.690	10.670	X	X	Tape 8	☑	☑	X	X	

Decoder #	In V@ Decoder	Percent	C1	C2	C3	C4	Tape #?	Turns on?				Notes
Decoder 8	11.99	10%	10.960	10.950	X	X	Tape 8	☑	☑	X	X	
Decoder 8	11.98	15%	11.120	11.110	X	X	Tape 8	☑	☑	X	X	
Decoder 8	11.98	25%	11.340	11.330	X	X	Tape 8	☑	☑	X	X	
Decoder 8	11.98	50%	11.650	11.650	X	X	Tape 8	☑	☑	X	X	
Decoder 8	11.98	75%	11.840	11.840	X	X	Tape 8	☑	☑	X	X	
Decoder 8	11.98	100%	11.970	11.970	X	X	Tape 8	☑	☑	X	X	
Decoder 8	12.01	0%	0.043	0.040	X	X	Tape 8	☐	☐	X	X	DC 0.8
Decoder 8	12.01	1%	7.140	7.030	X	X	Tape 8	☑	☑	X	X	
Decoder 8	12.00	5%	7.470	7.360	X	X	Tape 8	☑	☑	X	X	
Decoder 8	12.00	10%	7.810	7.720	X	X	Tape 8	☑	☑	X	X	
Decoder 8	12.00	15%	8.090	8.000	X	X	Tape 8	☑	☑	X	X	
Decoder 8	12.00	25%	8.650	8.570	X	X	Tape 8	☑	☑	X	X	
Decoder 8	11.99	50%	9.880	9.840	X	X	Tape 8	☑	☑	X	X	
Decoder 8	11.99	75%	10.960	10.950	X	X	Tape 8	☑	☑	X	X	
Decoder 8	11.98	100%	11.980	11.970	X	X	Tape 8	☑	☑	X	X	
Decoder 8	12.01	0%	0.010	0.010	X	X	Tape 8	☐	☐	X	X	DC 1.0
Decoder 8	12.01	1%	7.040	6.910	X	X	Tape 8	☑	☑	X	X	
Decoder 8	12.00	5%	7.230	7.110	X	X	Tape 8	☑	☑	X	X	
Decoder 8	12.00	10%	7.490	7.370	X	X	Tape 8	☑	☑	X	X	
Decoder 8	12.00	15%	7.720	7.620	X	X	Tape 8	☐	☐	X	X	
Decoder 8	12.00	25%	8.230	8.150	X	X	Tape 8	☑	☑	X	X	
Decoder 8	11.99	50%	9.490	9.440	X	X	Tape 8	☑	☑	X	X	
Decoder 8	11.98	75%	10.720	10.700	X	X	Tape 8	☑	☑	X	X	
Decoder 8	11.98	100%	11.970	11.970	X	X	Tape 8	☑	☑	X	X	
Decoder 8	12.01	0%	0.010	0.009	X	X	Tape 8	☐	☐	X	X	DC 1.5 (factory)
Decoder 8	21.01	1%	6.980	6.870	X	X	Tape 8	☑	☑	X	X	
Decoder 8	12.01	5%	7.060	6.930	X	X	Tape 8	☑	☑	X	X	
Decoder 8	12.01	10%	7.160	7.050	X	X	Tape 8	☑	☑	X	X	
Decoder 8	12.01	15%	7.290	7.180	X	X	Tape 8	☑	☑	X	X	
Decoder 8	12.00	25%	7.630	7.530	X	X	Tape 8	☑	☑	X	X	
Decoder 8	12.00	50%	8.790	8.720	X	X	Tape 8	☑	☑	X	X	
Decoder 8	11..99	75%	10.240	10.210	X	X	Tape 8	☑	☑	X	X	
Decoder 8	11.98	100%	11.970	11.970	X	X	Tape 8	☑	☑	X	X	
Decoder 8	12.01	0%	0.007	0.007	X	X	Tape 8	☐	☐	X	X	DC 2.5
Decoder 8	12.01	1%	0.007	0.007	X	X	Tape 8	☐	☐	X	X	
Decoder 8	12.01	5%	0.022	0.127	X	X	Tape 8	☐	☐	X	X	
Decoder 8	12.01	7%	6.980	6.870	X	X	Tape 8	☑	☑	X	X	
Decoder 8	12.01	10%	7.000	6.870	X	X	Tape 8	☑	☑	X	X	
Decoder 8	12.01	15%	7.010	6.880	X	X	Tape 8	☑	☑	X	X	
Decoder 8	12.01	25%	7.100	6.960	X	X	Tape 8	☑	☑	X	X	
Decoder 8	12.00	50%	7.840	7.740	X	X	Tape 8	☑	☑	X	X	
Decoder 8	11.99	75%	9.410	9.350	X	X	Tape 8	☑	☑	X	X	
Decoder 8	11.98	100%	11.980	11.980	X	X	Tape 8	☑	☑	X	X	
Decoder 8	12.01	0%	0.048	0.045	X	X	Tape 8	☐	☐	X	X	DC 3.5
Decoder 8	12.01	1%	0.047	0.045	X	X	Tape 8	☐	☐	X	X	
Decoder 8	12.01	5%	0.047	0.045	X	X	Tape 8	☐	☐	X	X	
Decoder 8	12.01	10%	0.010	0.010	X	X	Tape 8	☐	☐	X	X	
Decoder 8	12.01	14%	0.925	6.850	X	X	Tape 8	☐	☑	X	X	
Decoder 8	12.01	15%	6.790	6.,87	X	X	Tape 8	☑	☑	X	X	
Decoder 8	12.01	25%	7.040	6.920	X	X	Tape 8	☑	☑	X	X	

Decoder #	In V@ Decoder	Percent	C1	C2	C3	C4	Tape #?	Turns on?				Notes
Decoder 8	12.00	50%	7.450	7.340	X	X	Tape 8	☑	☑	X	X	
Decoder 8	12.00	75%	8.840	8.770	X	X	Tape 8	☑	☑	X	X	
Decoder 8	11.98	100%	11.980	11.980	X	X	Tape 8	☑	☑	X	X	
Decoder 8	12.01	0%	0.046	0.047	X	X	Tape 8	☐	☐	X	X	DC 6.5
Decoder 8	12.01	1%	0.044	0.049	X	X	Tape 8	☐	☐	X	X	
Decoder 8	12.01	5%	0.039	0.041	X	X	Tape 8	☐	☐	X	X	
Decoder 8	12.01	10%	0.048	0.042	X	X	Tape 8	☐	☐	X	X	
Decoder 8	12.01	15%	0.048	0.046	X	X	Tape 8	☐	☐	X	X	
Decoder 8	12.01	25%	0.008	0.008	X	X	Tape 8	☐	☐	X	X	
Decoder 8	12.01	35%	0.925	6.840	X	X	Tape 8	☐	☑	X	X	
Decoder 8	12.01	36%	6.980	6.860	X	X	Tape 8	☑	☑	X	X	
Decoder 8	12.01	50%	7.050	6.930	X	X	Tape 8	☑	☑	X	X	
Decoder 8	12.00	75%	7.760	7.660	X	X	Tape 8	☑	☑	X	X	
Decoder 8	11.98	100%	11.980	11.980	X	X	Tape 8	☑	☑	X	X	
Decoder 8	12.01	0%	0.011	0.011	X	X	Tape 8	☐	☐	X	X	DC 9.9
Decoder 8	12.01	1%	0.011	0.011	X	X	Tape 8	☐	☐	X	X	
Decoder 8	12.01	5%	0.014	0.013	X	X	Tape 8	☐	☐	X	X	
Decoder 8	12.01	10%	0.016	0.016	X	X	Tape 8	☐	☐	X	X	
Decoder 8	12.01	15%	0.011	0.011	X	X	Tape 8	☐	☐	X	X	
Decoder 8	12.01	25%	0.012	0.012	X	X	Tape 8	☐	☐	X	X	
Decoder 8	12.01	50%	0.923	6.820	X	X	Tape 8	☑	☑	X	X	
Decoder 8	12.00	75%	7.200	7.070	X	X	Tape 8	☑	☑	X	X	
Decoder 8	11.97	100%	11.970	11.970	X	X	Tape 8	☑	☑	X	X	
Decoder 8	24.44	0%	0.014	0.010	X	X	Tape 9	☐	☐	X	X	DC 0.1
Decoder 8	24.36	1%	20.490	20.570	X	X	Tape 9	☑	☑	X	X	
Decoder 8	24.34	5%	21.480	21.550	X	X	Tape 9	☑	☑	X	X	
Decoder 8	24.32	10%	22.090	22.030	X	X	Tape 9	☑	☑	X	X	
Decoder 8	24.32	15%	22.350	22.410	X	X	Tape 9	☑	☑	X	X	
Decoder 8	24.00	25%	22.830	22.880	X	X	Tape 9	☑	☑	X	X	
Decoder 8	24.30	50%	23.510	23.540	X	X	Tape 9	☑	☑	X	X	
Decoder 8	24.30	75%	23.910	23.930	X	X	Tape 9	☑	☑	X	X	
Decoder 8	24.29	100%	24.240	24.240	X	X	Tape 9	☑	☑	X	X	
Decoder 8	24.42	0%	0.005	0.008	X	X	Tape 9	☐	☐	X	X	DC 0.8
Decoder 8	24.42	1%	13.800	13.950	X	X	Tape 9	☑	☑	X	X	
Decoder 8	24.41	5%	14.470	14.620	X	X	Tape 9	☑	☑	X	X	
Decoder 8	24.40	10%	15.160	15.300	X	X	Tape 9	☑	☑	X	X	
Decoder 8	24.40	15%	15.680	15.830	X	X	Tape 9	☑	☑	X	X	
Decoder 8	24.38	25%	16.860	16.990	X	X	Tape 9	☑	☑	X	X	
Decoder 8	24.35	50%	19.560	19.660	X	X	Tape 9	☑	☑	X	X	
Decoder 8	24.32	75%	21.960	22.030	X	X	Tape 9	☑	☑	X	X	
Decoder 8	24.29	100%	24.240	24.240	X	X	Tape 9	☑	☑	X	X	
Decoder 8	24.42	0%	0.005	0.004	X	X	Tape 9	☐	☐	X	X	DC 1.0
Decoder 8	24.42	1%	13.750	13.910	X	X	Tape 9	☑	☑	X	X	
Decoder 8	24.41	5%	14.140	14.310	X	X	Tape 9	☑	☑	X	X	
Decoder 8	24.41	10%	14.660	14.830	X	X	Tape 9	☑	☑	X	X	
Decoder 8	24.40	15%	15.170	15.330	X	X	Tape 9	☑	☑	X	X	
Decoder 8	24.39	25%	16.250	16.390	X	X	Tape 9	☑	☑	X	X	
Decoder 8	24.35	50%	18.910	19.040	X	X	Tape 9	☑	☑	X	X	
Decoder 8	24.32	75%	21.610	21.530	X	X	Tape 9	☑	☑	X	X	
Decoder 8	24.29	100%	24.240	24.240	X	X	Tape 9	☑	☑	X	X	

Decoder #	In V@ Decoder	Percent	C1	C2	C3	C4	Tape #?	Turns on?				Notes
Decoder 8	24.42	0%	0.016	0.013	X	X	Tape 9	☐	☐	X	X	DC 1.5 (factory)
Decoder 8	24.42	1%	11.640	13.740	X	X	Tape 9	☑	☑	X	X	
Decoder 8	24.42	5%	13.640	13.780	X	X	Tape 9	☑	☑	X	X	
Decoder 8	24.42	10%	13.790	13.940	X	X	Tape 9	☑	☑	X	X	
Decoder 8	24.42	15%	14.010	14.170	X	X	Tape 9	☑	☑	X	X	
Decoder 8	24.41	25%	14.670	14.810	X	X	Tape 9	☑	☑	X	X	
Decoder 8	24.38	50%	17.170	17.310	X	X	Tape 9	☑	☑	X	X	
Decoder 8	24.33	75%	20.390	20.480	X	X	Tape 9	☑	☑	X	X	
Decoder 8	24.29	100%	24.240	24.240	X	X	Tape 9	☑	☑	X	X	
Decoder 8	24.42	0%	0.016	0.013	X	X	Tape 9	☐	☐	X	X	DC 2.5
Decoder 8	24.42	1%	0.017	0.011	X	X	Tape 9	☐	☐	X	X	
Decoder 8	24.42	5%	0.007	0.006	X	X	Tape 9	☐	☐	X	X	
Decoder 8	24.42	7%	11.690	13.820	X	X	Tape 9	☑	☑	X	X	
Decoder 8	24.43	10%	13.470	13.840	X	X	Tape 9	☑	☑	X	X	
Decoder 8	24.42	15%	13.710	13.880	X	X	Tape 9	☑	☑	X	X	
Decoder 8	24.41	25%	13.950	14.110	X	X	Tape 9	☑	☑	X	X	
Decoder 8	24.40	50%	15.520	15.650	X	X	Tape 9	☑	☑	X	X	
Decoder 8	24.36	75%	18.780	18.880	X	X	Tape 9	☑	☑	X	X	
Decoder 8	24.29	100%	24.250	24.250	X	X	Tape 9	☑	☑	X	X	
Decoder 8	24.42	0%	0.023	0.017	X	X	Tape 9	☐	☐	X	X	DC 3.5
Decoder 8	24.42	1%	0.023	0.015	X	X	Tape 9	☐	☐	X	X	
Decoder 8	24.42	5%	0.024	0.017	X	X	Tape 9	☐	☐	X	X	
Decoder 8	24.42	10%	0.022	0.015	X	X	Tape 9	☐	☐	X	X	
Decoder 8	24.42	15%	6.530	15.800	X	X	Tape 9	☐	☑	X	X	
Decoder 8	24.42	16%	13.680	13.820	X	X	Tape 9	☑	☑	X	X	
Decoder 8	24.42	25%	13.680	13.830	X	X	Tape 9	☑	☑	X	X	
Decoder 8	24.41	50%	14.500	14.640	X	X	Tape 9	☑	☑	X	X	
Decoder 8	24.38	75%	17.440	17.550	X	X	Tape 9	☑	☑	X	X	
Decoder 8	24.29	100%	24.250	24.250	X	X	Tape 9	☑	☑	X	X	
Decoder 8	24.42	0%	0.023	0.017	X	X	Tape 9	☐	☐	X	X	DC 6.5
Decoder 8	24.42	1%	0.006	0.005	X	X	Tape 9	☐	☐	X	X	
Decoder 8	24.42	5%	0.011	0.006	X	X	Tape 9	☐	☐	X	X	
Decoder 8	24.42	10%	0.027	0.008	X	X	Tape 9	☐	☐	X	X	
Decoder 8	24.42	15%	0.009	0.005	X	X	Tape 9	☐	☐	X	X	
Decoder 8	24.42	25%	0.011	0.008	X	X	Tape 9	☐	☐	X	X	
Decoder 8	24.43	35%	0.690	13.560	X	X	Tape 9	☐	☑	X	X	
Decoder 8	24.43	36%	11.710	13.830	X	X	Tape 9	☑	☑	X	X	
Decoder 8	24.42	50%	13.780	13.920	X	X	Tape 9	☑	☑	X	X	
Decoder 8	24.41	75%	15.280	15.410	X	X	Tape 9	☑	☑	X	X	
Decoder 8	24.29	100%	24.250	24.250	X	X	Tape 9	☑	☑	X	X	
Decoder 8	24.42	0%	0.023	0.017	X	X	Tape 9	☐	☐	X	X	DC 9.9
Decoder 8	24.42	1%	0.004	0.005	X	X	Tape 9	☐	☐	X	X	
Decoder 8	24.42	5%	0.004	0.003	X	X	Tape 9	☐	☐	X	X	
Decoder 8	24.42	10%	0.003	0.003	X	X	Tape 9	☐	☐	X	X	
Decoder 8	24.42	15%	0.003	0.004	X	X	Tape 9	☐	☐	X	X	
Decoder 8	24.42	25%	0.011	0.011	X	X	Tape 9	☐	☐	X	X	
Decoder 8	24.42	50%	0.685	13.850	X	X	Tape 9	☐	☑	X	X	
Decoder 8	24.42	52%	13.640	13.820	X	X	Tape 9	☑	☑	X	X	
Decoder 8	24.42	75%	14.220	14.360	X	X	Tape 9	☑	☑	X	X	
Decoder 8	24.29	100%	24.250	24.250	X	X	Tape 9	☑	☑	X	X	

Decoder #	In V@ Decoder	Percent	C1	C2	C3	C4	Tape #?	Turns on?				Notes
Decoder 8	24.43	0%	0.381	0.147	0.134	0.111	Tape 10	☐	☐	☐	☐	DC 0.1
Decoder 8	24.34	1%	18.630	19.210	19.520	20.460	Tape 10	☑	☑	☑	☑	
Decoder 8	24.33	5%	20.170	20.590	20.830	21.510	Tape 10	☑	☑	☑	☑	
Decoder 8	24.33	10%	21.020	21.360	21.540	22.080	Tape 10	☑	☑	☑	☑	
Decoder 8	24.32	15%	21.510	21.800	21.950	22.410	Tape 10	☑	☑	☑	☑	
Decoder 8	24.31	25%	22.210	22.430	22.540	22.890	Tape 10	☑	☑	☑	☑	
Decoder 8	24.30	50%	23.200	23.320	23.370	23.560	Tape 10	☑	☑	☑	☑	
Decoder 8	24.30	75%	23.810	23.870	23.880	23.960	Tape 10	☑	☑	☑	☑	
Decoder 8	24.29	100%	24.270	24.270	24.270	24.250	Tape 10	☑	☑	☑	☑	
Decoder 8	24.43	0%	0.381	0.147	0.134	0.111	Tape 10	☐	☐	☐	☐	DC 0.8
Decoder 8	24.43	1%	8.810	10.460	11.320	13.910	Tape 10	☑	☑	☑	☑	
Decoder 8	24.43	5%	9.830	11.330	12.160	14.520	Tape 10	☑	☑	☑	☑	
Decoder 8	24.42	10%	10.910	12.310	13.090	15.270	Tape 10	☑	☑	☑	☑	
Decoder 8	24.41	15%	11.810	13.100	13.830	15.830	Tape 10	☑	☑	☑	☑	
Decoder 8	24.40	25%	13.570	14.690	15.340	17.050	Tape 10	☑	☑	☑	☑	
Decoder 8	24.37	50%	17.510	18.200	18.610	19.690	Tape 10	☑	☑	☑	☑	
Decoder 8	24.34	75%	20.990	21.330	21.520	22.060	Tape 10	☑	☑	☑	☑	
Decoder 8	24.31	100%	24.290	24.290	24.290	24.270	Tape 10	☑	☑	☑	☑	
Decoder 8	24.46	0%	0.500	0.300	0.140	0.200	Tape 10	☐	☐	☐	☐	DC 1.0
Decoder 8	24.45	1%	8.450	10.250	11.200	13.740	Tape 10	☑	☑	☑	☑	
Decoder 8	24.45	5%	9.210	10.800	11.640	14.170	Tape 10	☑	☑	☑	☑	
Decoder 8	24.44	10%	10.060	11.550	12.350	14.720	Tape 10	☑	☑	☑	☑	
Decoder 8	24.43	15%	10.820	12.230	12.980	15.210	Tape 10	☑	☑	☑	☑	
Decoder 8	24.42	25%	12.440	13.670	14.340	16.310	Tape 10	☑	☑	☑	☑	
Decoder 8	24.39	50%	16.400	17.210	17.660	18.960	Tape 10	☑	☑	☑	☑	
Decoder 8	24.35	75%	20.310	20.720	20.940	21.620	Tape 10	☑	☑	☑	☑	
Decoder 8	24.32	100%	24.290	24.290	24.290	24.270	Tape 10	☑	☑	☑	☑	
Decoder 8	24.44	0%	0.095	0.070	0.096	0.079	Tape 10	☐	☐	☐	☐	DC 1.5 (factory)
Decoder 8	24.44	1%	6.351	11.740	12.210	13.740	Tape 10	☐	☑	☑	☑	
Decoder 8	24.44	2%	7.700	10.470	9.830	13.720	Tape 10	☑	☑	☑	☑	
Decoder 8	24.44	5%	8.520	10.240	11.150	13.690	Tape 10	☑	☑	☑	☑	
Decoder 8	24.44	10%	8.930	10.470	11.350	13.920	Tape 10	☑	☑	☑	☑	
Decoder 8	24.43	15%	9.340	10.830	11.690	14.110	Tape 10	☑	☑	☑	☑	
Decoder 8	24.43	25%	10.330	11.740	12.580	14.840	Tape 10	☑	☑	☑	☑	
Decoder 8	24.40	50%	14.010	15.030	15.640	17.250	Tape 10	☑	☑	☑	☑	
Decoder 8	24.36	75%	18.660	19.230	19.560	20.460	Tape 10	☑	☑	☑	☑	
Decoder 8	24.31	100%	24.290	24.280	24.280	24.270	Tape 10	☑	☑	☑	☑	
Decoder 8	24.44	0%	0.035	0.024	0.036	0.025	Tape 10	☐	☐	☐	☐	DC 2.5
Decoder 8	24.44	1%	0.078	0.058	0.079	0.064	Tape 10	☐	☐	☐	☐	
Decoder 8	24.44	5%	0.080	0.062	0.085	0.069	Tape 10	☐	☐	☐	☐	
Decoder 8	24.44	7%	6.390	11.760	12.230	13.760	Tape 10	☐	☑	☑	☑	
Decoder 8	24.44	8%	7.820	11.640	11.090	13.790	Tape 10	☑	☑	☑	☑	
Decoder 8	24.44	10%	7.690	10.700	11.320	13.680	Tape 10	☑	☑	☑	☑	
Decoder 8	24.44	15%	8.420	10.270	11.190	13.690	Tape 10	☑	☑	☑	☑	
Decoder 8	24.44	25%	8.950	10.500	11.360	13.940	Tape 10	☑	☑	☑	☑	
Decoder 8	24.42	50%	11.350	12.640	13.370	15.520	Tape 10	☑	☑	☑	☑	
Decoder 8	24.38	75%	16.180	16.990	17.460	18.820	Tape 10	☑	☑	☑	☑	
Decoder 8	24.31	100%	24.290	24.280	24.280	24.270	Tape 10	☑	☑	☑	☑	
Decoder 8	24.44	0%	0.029	0.022	0.031	0.024	Tape 10	☐	☐	☐	☐	DC 3.5
Decoder 8	24.44	1%	0.028	0.022	0.029	0.024	Tape 10	☐	☐	☐	☐	

Decoder #	In V@ Decoder	Percent	C1	C2	C3	C4	Tape #?	Turns on?				Notes
Decoder 8	24.44	5%	0.029	0.023	0.030	0.024	Tape 10	☐	☐	☐	☐	
Decoder 8	24.44	10%	0.035	0.029	0.035	0.035	Tape 10	☐	☐	☐	☐	
Decoder 8	24.44	14%	0.906	11.410	0.882	13.750	Tape 10	☐	☐	☐	☐	
Decoder 8	24.43	15%	2.480	11.760	12.040	13.760	Tape 10	☐	☑	☑	☑	
Decoder 8	24.43	16%	7.340	11.740	11.980	13.780	Tape 10	☑	☑	☑	☑	
Decoder 8	24.44	25%	8.360	10.250	11.170	13.640	Tape 10	☑	☑	☑	☑	
Decoder 8	24.43	50%	9.910	11.340	12.150	14.540	Tape 10	☑	☑	☑	☑	
Decoder 8	24.39	75%	14.220	15.210	15.790	17.440	Tape 10	☑	☑	☑	☑	
Decoder 8	24.31	100%	24.280	24.280	24.280	24.260	Tape 10	☑	☑	☑	☑	
Decoder 8	24.44	0%	0.014	0.011	0.016	0.012	Tape 10	☐	☐	☐	☐	DC 6.5
Decoder 8	24.44	1%	0.015	0.011	0.016	0.012	Tape 10	☐	☐	☐	☐	
Decoder 8	24.44	5%	0.014	0.012	0.016	0.012	Tape 10	☐	☐	☐	☐	
Decoder 8	24.44	10%	0.015	0.011	0.016	0.012	Tape 10	☐	☐	☐	☐	
Decoder 8	24.44	15%	0.015	0.012	0.015	0.011	Tape 10	☐	☐	☐	☐	
Decoder 8	24.44	25%	0.016	0.011	0.016	0.013	Tape 10	☐	☐	☐	☐	
Decoder 8	24.44	35%	0.902	11.400	0.898	13.750	Tape 10	☐	☑	☐	☑	
Decoder 8	24.44	36%	6.390	11.760	12.210	13.760	Tape 10	☐	☑	☑	☑	
Decoder 8	24.44	37%	7.500	11.760	12.240	13.770	Tape 10	☑	☑	☑	☑	
Decoder 8	24.44	50%	8.540	10.260	11.140	13.710	Tape 10	☑	☑	☑	☑	
Decoder 8	24.42	75%	10.950	12.270	13.020	15.250	Tape 10	☑	☑	☑	☑	
Decoder 8	24.31	100%	24.290	24.290	24.290	24.270	Tape 10	☑	☑	☑	☑	
Decoder 8	24.43	0%	0.006	0.007	0.005	0.005	Tape 10	☐	☐	☐	☐	DC 9.9
Decoder 8	24.43	1%	0.006	0.005	0.007	0.005	Tape 10	☐	☐	☐	☐	
Decoder 8	24.43	5%	0.005	0.005	0.005	0.006	Tape 10	☐	☐	☐	☐	
Decoder 8	24.43	10%	0.023	0.018	0.025	0.019	Tape 10	☐	☐	☐	☐	
Decoder 8	24.43	15%	0.005	0.005	0.007	0.005	Tape 10	☐	☐	☐	☐	
Decoder 8	24.43	25%	0.100	0.032	0.015	0.008	Tape 10	☐	☐	☐	☐	
Decoder 8	24.43	50%	0.913	11.410	0.900	13.750	Tape 10	☐	☑	☐	☑	
Decoder 8	24.43	51%	2.550	11.760	12.040	13.760	Tape 10	☐	☑	☑	☑	
Decoder 8	24.43	52%	7.460	11.750	12.120	13.770	Tape 10	☑	☑	☑	☑	
Decoder 8	24.42	75%	9.400	10.880	11.720	14.230	Tape 10	☑	☑	☑	☑	
Decoder 8	24.30	100%	24.280	24.280	24.280	24.260	Tape 10	☑	☑	☑	☑	
Decoder 8	24.46	0%	0.024	0.018	0.025	0.017	Tape 11	☐	☐	☐	☐	DC 0.1
Decoder 8	24.37	1%	18.570	19.210	19.620	20.410	Tape 11	☑	☑	☑	☑	
Decoder 8	24.35	5%	20.180	20.630	20.930	21.490	Tape 11	☑	☑	☑	☑	
Decoder 8	24.35	10%	21.030	21.390	21.620	22.070	Tape 11	☑	☑	☑	☑	
Decoder 8	24.34	15%	21.520	21.820	22.020	22.400	Tape 11	☑	☑	☑	☑	
Decoder 8	24.33	25%	22.220	22.450	22.590	22.880	Tape 11	☑	☑	☑	☑	
Decoder 8	24.32	50%	23.220	23.340	23.410	23.550	Tape 11	☑	☑	☑	☑	
Decoder 8	24.31	75%	23.820	23.880	23.900	23.960	Tape 11	☑	☑	☑	☑	
Decoder 8	24.31	100%	24.290	24.280	24.280	24.260	Tape 11	☑	☑	☑	☑	
Decoder 8	24.43	0%	0.020	0.015	0.020	0.013	Tape 11	☐	☐	☐	☐	DC 0.8
Decoder 8	24.43	1%	8.810	10.550	11.610	13.860	Tape 11	☑	☑	☑	☑	
Decoder 8	24.42	5%	9.820	11.450	12.460	14.550	Tape 11	☑	☑	☑	☑	
Decoder 8	24.41	10%	10.910	12.420	13.340	15.240	Tape 11	☑	☑	☑	☑	
Decoder 8	24.41	15%	11.770	13.200	14.080	15.850	Tape 11	☑	☑	☑	☑	
Decoder 8	24.39	25%	13.560	14.770	15.540	16.990	Tape 11	☑	☑	☑	☑	
Decoder 8	24.36	50%	17.480	18.250	18.740	19.670	Tape 11	☑	☑	☑	☑	
Decoder 8	24.33	75%	20.970	21.340	21.570	22.020	Tape 11	☑	☑	☑	☑	
Decoder 8	24.30	100%	24.280	24.280	24.280	24.260	Tape 11	☑	☑	☑	☑	

Decoder #	In V@ Decoder	Percent	C1	C2	C3	C4	Tape #?	Turns on?				Notes
Decoder 8	24.42	0%	0.036	0.027	0.039	0.028	Tape 11	☐	☐	☐	☐	DC 1.0
Decoder 8	24.42	1%	8.550	10.430	11.500	13.730	Tape 11	☑	☑	☑	☑	
Decoder 8	24.42	5%	9.240	10.920	11.940	14.160	Tape 11	☑	☑	☑	☑	
Decoder 8	24.41	10%	10.050	11.660	12.630	14.710	Tape 11	☑	☑	☑	☑	
Decoder 8	24.41	15%	10.790	12.300	13.220	15.180	Tape 11	☑	☑	☑	☑	
Decoder 8	24.39	25%	12.410	13.740	14.560	16.270	Tape 11	☑	☑	☑	☑	
Decoder 8	24.36	50%	16.400	17.260	17.800	18.920	Tape 11	☑	☑	☑	☑	
Decoder 8	24.33	75%	20.290	20.720	21.010	21.580	Tape 11	☑	☑	☑	☑	
Decoder 8	24.29	100%	24.270	24.270	24.270	24.250	Tape 11	☑	☑	☑	☑	
Decoder 8	24.42	0%	0.026	0.019	0.027	0.018	Tape 11	☐	☐	☐	☐	DC 1.5 (factory)
Decoder 8	24.42	1%	6.454	11.900	12.520	13.930	Tape 11	☑	☑	☑	☑	
Decoder 8	24.42	5%	8.500	10.410	11.480	13.700	Tape 11	☑	☑	☑	☑	
Decoder 8	24.42	10%	8.860	10.600	11.670	13.920	Tape 11	☑	☑	☑	☑	
Decoder 8	24.42	15%	9.250	10.930	11.990	14.120	Tape 11	☑	☑	☑	☑	
Decoder 8	24.41	25%	10.270	11.870	12.880	14.860	Tape 11	☑	☑	☑	☑	
Decoder 8	24.38	50%	13.960	15.120	15.860	17.260	Tape 11	☑	☑	☑	☑	
Decoder 8	24.34	75%	18.640	19.270	19.680	20.450	Tape 11	☑	☑	☑	☑	
Decoder 8	24.29	100%	24.270	24.270	24.270	24.250	Tape 11	☑	☑	☑	☑	
Decoder 8	24.42	0%	0.026	0.019	0.027	0.018	Tape 11	☐	☐	☐	☐	DC 2.5
Decoder 8	24.42	1%	0.031	0.023	0.033	0.023	Tape 11	☐	☐	☐	☐	
Decoder 8	24.42	5%	0.036	0.028	0.042	0.024	Tape 11	☐	☐	☐	☐	
Decoder 8	24.42	7%	6.477	11.910	12.540	13.950	Tape 11	☑	☑	☑	☑	
Decoder 8	24.42	10%	7.810	10.860	11.640	13.640	Tape 11	☑	☑	☑	☑	
Decoder 8	24.42	15%	8.430	10.450	11.510	13.710	Tape 11	☑	☑	☑	☑	
Decoder 8	24.42	25%	8.910	10.640	11.680	13.960	Tape 11	☑	☑	☑	☑	
Decoder 8	24.40	50%	11.300	12.750	13.630	15.520	Tape 11	☑	☑	☑	☑	
Decoder 8	24.36	75%	16.130	17.040	17.610	18.790	Tape 11	☑	☑	☑	☑	
Decoder 8	24.29	100%	24.270	24.260	24.270	24.250	Tape 11	☑	☑	☑	☑	
Decoder 8	24.43	0%	0.023	0.017	0.024	0.015	Tape 11	☐	☐	☐	☐	DC 3.5
Decoder 8	24.43	1%	0.020	0.015	0.022	0.014	Tape 11	☐	☐	☐	☐	
Decoder 8	24.43	5%	0.022	0.017	0.024	0.015	Tape 11	☐	☐	☐	☐	
Decoder 8	24.43	10%	0.022	0.017	0.024	0.016	Tape 11	☐	☐	☐	☐	
Decoder 8	24.42	14%	0.082	11.650	0.845	13.920	Tape 11	☐	☑	☐	☑	
Decoder 8	24.42	15%	2.790	11.870	12.300	13.890	Tape 11	☑	☑	☑	☑	
Decoder 8	24.42	25%	8.360	10.410	11.490	13.650	Tape 11	☑	☑	☑	☑	
Decoder 8	24.41	50%	9.750	11.380	12.400	14.440	Tape 11	☑	☑	☑	☑	
Decoder 8	24.37	75%	14.150	15.290	16.010	17.420	Tape 11	☑	☑	☑	☑	
Decoder 8	24.29	100%	24.270	24.260	24.270	24.250	Tape 11	☑	☑	☑	☑	
Decoder 8	24.44	0%	0.042	0.030	0.044	0.030	Tape 11	☐	☐	☐	☐	DC 6.5
Decoder 8	24.44	1%	0.040	0.028	0.042	0.028	Tape 11	☐	☐	☐	☐	
Decoder 8	24.44	5%	0.043	0.031	0.045	0.030	Tape 11	☐	☐	☐	☐	
Decoder 8	24.44	10%	0.042	0.030	0.044	0.030	Tape 11	☐	☐	☐	☐	
Decoder 8	24.44	15%	0.041	0.028	0.041	0.028	Tape 11	☐	☐	☐	☐	
Decoder 8	24.44	25%	0.039	0.029	0.043	0.028	Tape 11	☐	☐	☐	☐	
Decoder 8	24.44	35%	0.845	11.550	0.875	13.940	Tape 11	☐	☑	☐	☑	
Decoder 8	24.44	36%	6.480	11.910	12.540	13.950	Tape 11	☑	☑	☑	☑	
Decoder 8	24.44	50%	8.520	10.440	11.490	13.730	Tape 11	☑	☑	☑	☑	
Decoder 8	24.42	75%	10.890	12.390	13.300	15.250	Tape 11	☑	☑	☑	☑	
Decoder 8	24.31	100%	24.290	24.290	24.290	24.270	Tape 11	☑	☑	☑	☑	
Decoder 8	24.44	0%	0.020	0.016	0.023	0.015	Tape 11	☐	☐	☐	☐	DC 9.9

Decoder #	In V@ Decoder	Percent	C1	C2	C3	C4	Tape #?	Turns on?				Notes
Decoder 8	24.44	1%	0.021	0.016	0.023	0.014	Tape 11	☐	☐	☐	☐	
Decoder 8	24.44	5%	0.022	0.015	0.023	0.015	Tape 11	☐	☐	☐	☐	
Decoder 8	24.44	10%	0.025	0.017	0.025	0.017	Tape 11	☐	☐	☐	☐	
Decoder 8	24.44	15%	0.015	0.015	0.021	0.130	Tape 11	☐	☐	☐	☐	
Decoder 8	24.44	25%	0.019	0.016	0.021	0.014	Tape 11	☐	☐	☐	☐	
Decoder 8	24.45	50%	0.853	11.470	0.852	13.800	Tape 11	☐	☑	☐	☑	
Decoder 8	24.44	51%	7.740	11.880	12.300	13.920	Tape 11	☑	☑	☑	☑	
Decoder 8	24.45	75%	9.060	10.820	11.940	14.080	Tape 11	☑	☑	☑	☑	
Decoder 8	24.31	100%	24.290	24.290	24.290	24.270	Tape 11	☑	☑	☑	☑	
Decoder 8	24.44	0%	0.685	0.058	0.036	0.777	Tape12	☐	☐	☐	☐	DC 0.1
Decoder 8	24.29	1%	18.100	17.750	20.290	18.570	Tape12	☑	☑	☑	☑	
Decoder 8	24.27	5%	19.800	19.550	21.380	20.160	Tape12	☑	☑	☑	☑	
Decoder 8	24.25	10%	20.700	20.500	21.950	21.000	Tape12	☑	☑	☑	☑	
Decoder 8	24.25	15%	21.220	21.050	22.280	21.480	Tape12	☑	☑	☑	☑	
Decoder 8	24.24	25%	21.970	21.840	22.760	22.180	Tape12	☑	☑	☑	☑	
Decoder 8	24.22	50%	23.020	22.960	23.430	23.170	Tape12	☑	☑	☑	☑	
Decoder 8	24.22	75%	23.670	23.660	23.840	23.760	Tape12	☑	☑	☑	☑	
Decoder 8	24.21	100%	24.170	24.170	24.170	24.170	Tape12	☑	☑	☑	☑	
Decoder 8	24.44	0%	0.685	0.058	0.036	0.777	Tape12	☐	☐	☐	☐	DC 0.8
Decoder 8	24.43	1%	7.900	7.190	13.990	9.530	Tape12	☑	☑	☑	☑	
Decoder 8	24.42	5%	9.060	8.340	14.670	10.490	Tape12	☑	☑	☑	☑	
Decoder 8	24.41	10%	10.220	9.540	15.390	11.540	Tape12	☑	☑	☑	☑	
Decoder 8	24.40	15%	11.170	10.500	15.960	12.340	Tape12	☑	☑	☑	☑	
Decoder 8	24.37	25%	13.040	12.450	17.150	14.070	Tape12	☑	☑	☑	☑	
Decoder 8	24.32	50%	17.130	16.720	19.700	17.750	Tape12	☑	☑	☑	☑	
Decoder 8	24.27	75%	20.720	20.520	21.990	21.090	Tape12	☑	☑	☑	☑	
Decoder 8	24.22	100%	24.170	24.170	24.170	24.170	Tape12	☑	☑	☑	☑	
Decoder 8	24.44	0%	0.685	0.058	0.036	0.777	Tape12	☐	☐	☐	☐	DC 1.0
Decoder 8	24.44	1%	7.420	7.110	13.770	9.130	Tape12	☑	☑	☑	☑	
Decoder 8	24.43	5%	8.220	7.440	14.130	9.690	Tape12	☑	☑	☑	☑	
Decoder 8	24.41	10%	9.050	8.280	14.630	10.390	Tape12	☑	☑	☑	☑	
Decoder 8	24.41	15%	9.840	9.080	15.050	10.890	Tape12	☑	☑	☑	☑	
Decoder 8	24.38	25%	11.460	10.790	16.100	12.470	Tape12	☑	☑	☑	☑	
Decoder 8	24.32	50%	15.720	15.260	18.760	16.280	Tape12	☑	☑	☑	☑	
Decoder 8	24.25	75%	19.900	19.660	21.440	20.250	Tape12	☑	☑	☑	☑	
Decoder 8	24.22	100%	24.170	24.170	24.170	24.170	Tape12	☑	☑	☑	☑	
Decoder 8	24.44	0%	0.024	0.017	0.018	0.027	Tape12	☐	☐	☐	☐	DC 1.5 (factory)
Decoder 8	24.44	1%	6.770	11.680	13.430	8.990	Tape12	☐	☑	☑	☑	
Decoder 8	24.44	2%	8.130	9.500	11.670	9.090	Tape12	☑	☑	☑	☑	
Decoder 8	24.44	5%	7.490	7.290	13.850	9.270	Tape12	☑	☑	☑	☑	
Decoder 8	24.44	10%	7.980	7.270	14.040	9.600	Tape12	☑	☑	☑	☑	
Decoder 8	24.43	15%	8.440	7.720	14.300	9.970	Tape12	☑	☑	☑	☑	
Decoder 8	24.42	25%	9.600	8.930	15.020	11.020	Tape12	☑	☑	☑	☑	
Decoder 8	24.37	50%	13.430	12.850	17.370	14.360	Tape12	☑	☑	☑	☑	
Decoder 8	24.30	75%	18.310	17.970	20.470	18.880	Tape12	☑	☑	☑	☑	
Decoder 8	24.22	100%	24.170	24.170	24.170	24.170	Tape12	☑	☑	☑	☑	
Decoder 8	24.45	0%	0.024	0.017	0.018	0.027	Tape12	☐	☐	☐	☐	DC 2.5
Decoder 8	24.45	1%	0.012	0.018	0.017	0.025	Tape12	☐	☐	☐	☐	
Decoder 8	24.45	5%	0.025	0.021	0.021	0.033	Tape12	☐	☐	☐	☐	
Decoder 8	24.45	7%	6.740	11.670	13.420	8.980	Tape12	☐	☑	☑	☑	

Decoder #	In V@ Decoder	Percent	C1	C2	C3	C4	Tape #?	Turns on?				Notes
Decoder 8	24.45	8%	8.170	11.200	13.250	9.050	Tape12	☑	☑	☑	☑	
Decoder 8	24.45	10%	7.300	8.950	13.760	9.030	Tape12	☑	☑	☑	☑	
Decoder 8	24.45	15%	7.330	7.410	13.750	9.040	Tape12	☑	☑	☑	☑	
Decoder 8	24.45	25%	7.830	7.060	13.920	9.400	Tape12	☑	☑	☑	☑	
Decoder 8	24.41	50%	10.430	9.730	15.490	11.640	Tape12	☑	☑	☑	☑	
Decoder 8	24.34	75%	15.520	15.030	18.660	16.210	Tape12	☑	☑	☑	☑	
Decoder 8	24.22	100%	24.180	24.170	24.180	24.180	Tape12	☑	☑	☑	☑	
Decoder 8	24.45	0%	0.012	0.011	0.010	0.016	Tape12	☐	☐	☐	☐	DC 3.5
Decoder 8	24.44	1%	0.018	0.012	0.011	0.017	Tape12	☐	☐	☐	☐	
Decoder 8	24.44	5%	0.016	0.012	0.013	0.019	Tape12	☐	☐	☐	☐	
Decoder 8	24.44	10%	0.028	0.019	0.019	0.028	Tape12	☐	☐	☐	☐	
Decoder 8	24.44	15%	2.827	11.680	13.000	9.000	Tape12	☐	☑	☑	☑	
Decoder 8	24.44	16%	8.050	11.360	13.790	9.070	Tape12	☑	☑	☑	☑	
Decoder 8	24.44	25%	7.380	7.680	13.840	9.220	Tape12	☑	☑	☑	☑	
Decoder 8	24.42	50%	9.020	8.330	14.650	10.470	Tape12	☑	☑	☑	☑	
Decoder 8	24.37	75%	13.620	13.100	17.540	14.670	Tape12	☑	☑	☑	☑	
Decoder 8	24.22	100%	24.180	24.170	24.180	24.180	Tape12	☑	☑	☑	☑	
Decoder 8	24.45	0%	0.012	0.011	0.010	0.016	Tape12	☐	☐	☐	☐	DC 6.5
Decoder 8	24.45	1%	0.014	0.010	0.011	0.016	Tape12	☐	☐	☐	☐	
Decoder 8	24.45	5%	0.013	0.011	0.010	0.016	Tape12	☐	☐	☐	☐	
Decoder 8	24.45	10%	0.016	0.011	0.012	0.015	Tape12	☐	☐	☐	☐	
Decoder 8	24.45	15%	0.013	0.011	0.011	0.016	Tape12	☐	☐	☐	☐	
Decoder 8	24.45	25%	0.015	0.011	0.011	0.016	Tape12	☐	☐	☐	☐	
Decoder 8	24.45	35%	1.670	11.050	0.963	0.876	Tape12	☐	☑	☐	☑	
Decoder 8	24.45	36%	6.770	11.680	13.430	9.000	Tape12	☐	☑	☑	☑	
Decoder 8	24.45	37%	8.170	11.530	13.760	9.040	Tape12	☑	☑	☑	☑	
Decoder 8	24.45	50%	7.400	7.110	13.740	9.040	Tape12	☑	☑	☑	☑	
Decoder 8	24.42	75%	9.990	9.280	15.220	11.270	Tape12	☑	☑	☑	☑	
Decoder 8	24.22	100%	24.180	24.170	24.180	24.180	Tape12	☑	☑	☑	☑	
Decoder 8	24.44	0%	0.031	0.022	0.023	0.033	Tape12	☐	☐	☐	☐	DC 9.9
Decoder 8	24.44	1%	0.029	0.020	0.020	0.030	Tape12	☐	☐	☐	☐	
Decoder 8	24.44	5%	0.028	0.020	0.019	0.030	Tape12	☐	☐	☐	☐	
Decoder 8	24.44	10%	0.033	0.024	0.024	0.030	Tape12	☐	☐	☐	☐	
Decoder 8	24.44	15%	0.026	0.019	0.019	0.028	Tape12	☐	☐	☐	☐	
Decoder 8	24.44	25%	0.027	0.018	0.020	0.029	Tape12	☐	☐	☐	☐	
Decoder 8	24.44	50%	1.690	11.110	0.967	9.060	Tape12	☐	☑	☐	☑	
Decoder 8	24.44	51%	7.760	11.680	12.970	9.010	Tape12	☑	☑	☑	☑	
Decoder 8	24.43	75%	8.420	7.730	14.290	9.980	Tape12	☑	☑	☑	☑	
Decoder 8	24.22	100%	24.180	24.170	24.180	24.180	Tape12	☑	☑	☑	☑	
Decoder 9	X	0%	0.001	0.001	X	X	No Tape	☐	☐	☐	☐	
Decoder 9	X	1%	12.270	12.260	X	X	No Tape	☐	☐	☐	☐	
Decoder 9	X	5%	12.270	12.270	X	X	No Tape	☐	☐	☐	☐	
Decoder 9	X	10%	12.260	12.270	X	X	No Tape	☐	☐	☐	☐	
Decoder 9	X	15%	12.260	12.270	X	X	No Tape	☐	☐	☐	☐	
Decoder 9	X	25%	12.260	12.260	X	X	No Tape	☐	☐	☐	☐	
Decoder 9	X	50%	12.230	12.230	X	X	No Tape	☐	☐	☐	☐	
Decoder 9	X	75%	12.140	12.140	X	X	No Tape	☐	☐	☐	☐	
Decoder 9	X	100%	11.940	11.940	X	X	No Tape	☐	☐	☐	☐	
Decoder 9	X	0%	0.014	0.009	0.002	0.002	Tape 1	☐	☐	☐	☐	
Decoder 9	X	1%	4.213	6.016	6.960	7.100	Tape 1	☑	☑	☑	☑	

Decoder #	In V@ Decoder	Percent	C1	C2	C3	C4	Tape #?	Turns on?				Notes
Decoder 9	X	5%	3.755	6.050	6.750	7.180	Tape 1	☑	☑	☑	☑	Tape Channel 384 tested on C182
Decoder 9	X	10%	3.900	6.004	6.052	7.200	Tape 1	☑	☑	☑	☑	
Decoder 9	X	15%	3.959	6.034	5.861	7.220	Tape 1	☑	☑	☑	☑	
Decoder 9	X	25%	4.118	6.034	5.771	7.270	Tape 1	☑	☑	☑	☑	
Decoder 9	X	50%	4.725	6.443	6.146	7.580	Tape 1	☑	☑	☑	☑	
Decoder 9	X	75%	6.254	7.530	7.380	8.310	Tape 1	☑	☑	☑	☑	
Decoder 9	X	100%	9.610	9.790	9.800	9.890	Tape 1	☑	☑	☑	☑	
Decoder 9		N/A					Tape 2	☐	☐	☐	☐	WRONG VOLTAGE
Decoder 9	X	0%	0.003	0.003	0.009	X	Tape 3-5	☐	☐	☐	X	Tape 5 tested in Channel 1 (white)
Decoder 9	X	1%	9.340	4.083	7.130	X	Tape 3-5	☑	☑	☑	X	
Decoder 9	X	5%	9.480	3.660	7.220	X	Tape 3-5	☑	☑	☑	X	
Decoder 9	X	10%	9.500	3.659	7.240	X	Tape 3-5	☑	☑	☑	X	
Decoder 9	X	15%	9.510	3.685	7.260	X	Tape 3-5	☑	☑	☑	X	
Decoder 9	X	25%	9.540	3.742	7.310	X	Tape 3-5	☑	☑	☑	X	
Decoder 9	X	50%	9.690	4.401	7.660	X	Tape 3-5	☑	☑	☑	X	
Decoder 9	X	75%	9.920	6.285	8.520	X	Tape 3-5	☑	☑	☑	X	
Decoder 9	X	100%	10.350	10.310	10.390	X	Tape 3-5	☑	☑	☑	X	
Decoder 9		N/A					Tape 6	☐	☐	☐	☐	WRONG VOLTAGE
Decoder 9	X	0%	0.020	X	X	X	Tape 7	☐	X	X	X	
Decoder 9	X	1%	7.120	X	X	X	Tape 7	☑	X	X	X	
Decoder 9	X	5%	7.180	X	X	X	Tape 7	☑	X	X	X	
Decoder 9	X	10%	7.210	X	X	X	Tape 7	☑	X	X	X	
Decoder 9	X	15%	7.240	X	X	X	Tape 7	☑	X	X	X	
Decoder 9	X	25%	7.310	X	X	X	Tape 7	☑	X	X	X	
Decoder 9	X	50%	7.710	X	X	X	Tape 7	☑	X	X	X	
Decoder 9	X	75%	8.690	X	X	X	Tape 7	☑	X	X	X	
Decoder 9	X	100%	10.44	X	X	X	Tape 7	☑	X	X	X	
Decoder 9	X	0%	0.004	0.002	X	X	Tape 8	☐	☐	X	X	
Decoder 9	X	1%	7.220	7.130	X	X	Tape 8	☑	☑	X	X	
Decoder 9	X	5%	7.240	7.180	X	X	Tape 8	☑	☑	X	X	
Decoder 9	X	10%	7.280	7.210	X	X	Tape 8	☑	☑	X	X	
Decoder 9	X	15%	7.310	7.240	X	X	Tape 8	☑	☑	X	X	
Decoder 9	X	25%	7.380	7.310	X	X	Tape 8	☑	☑	X	X	
Decoder 9	X	50%	7.790	7.730	X	X	Tape 8	☑	☑	X	X	
Decoder 9	X	75%	8.890	8.860	X	X	Tape 8	☑	☑	X	X	
Decoder 9	X	100%	10.570	10.570	X	X	Tape 8	☑	☑	X	X	
Decoder 9		N/A					Tape 9	☐	☐	☐	☐	WRONG VOLTAGE
Decoder 9		N/A					Tape 10	☐	☐	☐	☐	WRONG VOLTAGE
Decoder 9		N/A					Tape 11	☐	☐	☐	☐	WRONG VOLTAGE

Decoder #	In V@ Decoder	Percent	C1	C2	C3	C4	Tape #?	Turns on?				Notes
Decoder 9		N/A					Tape12	☐	☐	☐	☐	WRONG VOLTAGE
Decoder 10		N/A					No Tape	☐	☐	☐	☐	DC 0.1
Decoder 10		N/A					No Tape	☐	☐	☐	☐	DC 0.8
Decoder 10		N/A					No Tape	☐	☐	☐	☐	DC 1.0
Decoder 10		N/A					No Tape	☐	☐	☐	☐	DC 1.5 (factory)
Decoder 10		N/A					No Tape	☐	☐	☐	☐	DC 2.5
Decoder 10		N/A					No Tape	☐	☐	☐	☐	DC 3.5
Decoder 10		N/A					No Tape	☐	☐	☐	☐	DC 6.5
Decoder 10		N/A					No Tape	☐	☐	☐	☐	DC 9.9
Decoder 10		N/A					Tape 1	☐	☐	☐	☐	DC 0.1
Decoder 10		N/A					Tape 1	☐	☐	☐	☐	DC 0.8
Decoder 10		N/A					Tape 1	☐	☐	☐	☐	DC 1.0
Decoder 10		N/A					Tape 1	☐	☐	☐	☐	DC 1.5 (factory)
Decoder 10		N/A					Tape 1	☐	☐	☐	☐	DC 2.5
Decoder 10		N/A					Tape 1	☐	☐	☐	☐	DC 3.5
Decoder 10		N/A					Tape 1	☐	☐	☐	☐	DC 6.5
Decoder 10		N/A					Tape 1	☐	☐	☐	☐	DC 9.9
Decoder 10		N/A					Tape 2	☐	☐	☐	X	DC 0.1
Decoder 10		N/A					Tape 2	☐	☐	☐	X	DC 0.8
Decoder 10		N/A					Tape 2	☐	☐	☐	X	DC 1.0
Decoder 10		N/A					Tape 2	☐	☐	☐	X	DC 1.5 (factory)
Decoder 10		N/A					Tape 2	☐	☐	☐	X	DC 2.5
Decoder 10		N/A					Tape 2	☐	☐	☐	X	DC 3.5
Decoder 10		N/A					Tape 2	☐	☐	☐	X	DC 6.5
Decoder 10		N/A					Tape 2	☐	☐	☐	X	DC 9.9
Decoder 10		N/A					Tape 3-5	☐	☐	☐	X	DC 0.1
Decoder 10		N/A					Tape 3-5	☐	☐	☐	X	DC 0.8
Decoder 10		N/A					Tape 3-5	☐	☐	☐	X	DC 1.0
Decoder 10		N/A					Tape 3-5	☐	☐	☐	X	DC 1.5 (factory)
Decoder 10		N/A					Tape 3-5	☐	☐	☐	X	DC 2.5
Decoder 10		N/A					Tape 3-5	☐	☐	☐	X	DC 3.5
Decoder 10		N/A					Tape 3-5	☐	☐	☐	X	DC 6.5
Decoder 10		N/A					Tape 3-5	☐	☐	☐	X	DC 9.9
Decoder 10	24.45	0%	0.188	0.060	0.045	0.019	Tape 6	☐	☐	☐	☐	DC 0.1
Decoder 10	24.40	1%	18.120	19.000	18.730	19.320	Tape 6	☑	☑	☑	☑	RGBW
Decoder 10	24.39	5%	19.880	20.500	20.310	20.740	Tape 6	☑	☑	☑	☑	
Decoder 10	24.39	10%	20.800	21.290	21.140	21.470	Tape 6	☑	☑	☑	☑	
Decoder 10	24.39	15%	21.330	21.750	21.620	21.910	Tape 6	☑	☑	☑	☑	
Decoder 10	24.38	25%	22.090	22.400	22.300	22.520	Tape 6	☑	☑	☑	☑	
Decoder 10	24.38	50%	23.180	23.340	23.290	23.400	Tape 6	☑	☑	☑	☑	
Decoder 10	24.38	75%	23.850	23.920	23.890	23.940	Tape 6	☑	☑	☑	☑	
Decoder 10	24.37	100%	24.350	24.350	24.350	24.350	Tape 6	☑	☑	☑	☑	
Decoder 10	24.44	0%	0.188	0.060	0.045	0.019	Tape 6	☐	☐	☐	☐	DC 0.8
Decoder 10	24.44	1%	7.420	9.930	9.120	10.720	Tape 6	☑	☑	☑	☑	RGBW
Decoder 10	24.44	5%	8.620	10.930	10.190	11.650	Tape 6	☑	☑	☑	☑	
Decoder 10	24.44	10%	9.820	11.950	11.290	12.640	Tape 6	☑	☑	☑	☑	
Decoder 10	24.43	15%	10.800	12.770	12.150	13.410	Tape 6	☑	☑	☑	☑	

Decoder #	In V@ Decoder	Percent	C1	C2	C3	C4	Tape #?	Turns on?				Notes
Decoder 10	24.43	25%	12.740	14.400	13.890	14.980	Tape 6	☑	☑	☑	☑	
Decoder 10	24.41	50%	16.980	18.020	17.700	18.380	Tape 6	☑	☑	☑	☑	
Decoder 10	24.39	75%	20.710	21.220	21.060	21.400	Tape 6	☑	☑	☑	☑	
Decoder 10	24.37	100%	24.290	24.300	24.290	24.300	Tape 6	☑	☑	☑	☑	
Decoder 10	24.44	0%	0.188	0.060	0.045	0.019	Tape 6	☐	☐	☐	☐	DC 1.0
Decoder 10	24.44	1%	7.070	9.690	8.810	10.480	Tape 6	☑	☑	☑	☑	RGBW
Decoder 10	24.44	5%	7.900	10.380	9.570	11.140	Tape 6	☑	☑	☑	☑	
Decoder 10	24.44	10%	8.830	11.160	10.400	11.870	Tape 6	☑	☑	☑	☑	
Decoder 10	24.44	15%	9.640	11.850	11.140	12.540	Tape 6	☑	☑	☑	☑	
Decoder 10	24.43	25%	11.370	13.280	12.680	13.900	Tape 6	☑	☑	☑	☑	
Decoder 10	24.41	50%	15.700	16.960	16.580	17.390	Tape 6	☑	☑	☑	☑	
Decoder 10	24.39	75%	19.950	20.570	20.370	20.790	Tape 6	☑	☑	☑	☑	
Decoder 10	24.37	100%	24.290	24.300	24.290	24.300	Tape 6	☑	☑	☑	☑	
Decoder 10	24.44	0%	0.188	0.060	0.045	0.019	Tape 6	☐	☐	☐	☐	DC 1.5 (factory)
Decoder 10	24.44	1%	6.840	10.060	9.180	10.540	Tape 6	☑	☑	☑	☑	RGBW
Decoder 10	24.44	5%	7.070	9.640	8.790	10.450	Tape 6	☑	☑	☑	☑	
Decoder 10	24.43	10%	7.540	10.030	9.220	10.820	Tape 6	☑	☑	☑	☑	
Decoder 10	24.43	15%	8.010	10.430	9.650	11.210	Tape 6	☑	☑	☑	☑	
Decoder 10	24.43	25%	9.240	11.470	10.750	12.180	Tape 6	☑	☑	☑	☑	
Decoder 10	24.42	50%	13.200	14.840	14.330	15.410	Tape 6	☑	☑	☑	☑	
Decoder 10	24.39	75%	18.200	19.080	18.790	19.390	Tape 6	☑	☑	☑	☑	
Decoder 10	24.37	100%	24.250	24.260	24.250	24.270	Tape 6	☑	☑	☑	☑	
Decoder 10	24.45	0%	0.025	0.022	0.017	0.018	Tape 6	☐	☐	☐	☐	DC 2.5
Decoder 10	24.45	1%	0.021	0.021	0.017	0.018	Tape 6	☐	☐	☐	☐	RGBW
Decoder 10	24.45	5%	7.910	11.450	12.450	12.910	Tape 6	☑	☑	☑	☑	
Decoder 10	24.45	10%	6.750	9.380	8.490	10.200	Tape 6	☑	☑	☑	☑	
Decoder 10	24.45	15%	6.890	9.480	8.620	10.280	Tape 6	☑	☑	☑	☑	
Decoder 10	24.45	25%	7.380	9.870	9.040	10.630	Tape 6	☑	☑	☑	☑	
Decoder 10	24.44	50%	10.020	12.110	11.450	12.790	Tape 6	☑	☑	☑	☑	
Decoder 10	24.41	75%	15.330	16.610	16.210	17.050	Tape 6	☑	☑	☑	☑	
Decoder 10	24.37	100%	24.180	24.200	24.190	24.210	Tape 6	☑	☑	☑	☑	
Decoder 10	24.44	0%	0.013	0.018	0.018	0.017	Tape 6	☐	☐	☐	☐	DC 3.5
Decoder 10	24.44	1%	0.016	0.016	0.015	0.014	Tape 6	☐	☐	☐	☐	RGBW
Decoder 10	24.44	5%	0.015	0.015	0.017	0.015	Tape 6	☐	☐	☐	☐	
Decoder 10	24.44	10%	0.015	0.014	0.016	0.016	Tape 6	☐	☐	☐	☐	
Decoder 10	24.44	12%	7.030	11.560	12.140	12.900	Tape 6	☑	☑	☑	☑	
Decoder 10	24.44	15%	6.910	10.070	9.200	10.590	Tape 6	☑	☑	☑	☑	
Decoder 10	24.44	25%	7.060	9.690	8.830	10.500	Tape 6	☑	☑	☑	☑	
Decoder 10	24.44	50%	8.680	11.040	10.310	11.810	Tape 6	☑	☑	☑	☑	
Decoder 10	24.42	75%	13.380	15.020	14.520	15.560	Tape 6	☑	☑	☑	☑	
Decoder 10	24.37	100%	24.110	24.140	24.130	24.150	Tape 6	☑	☑	☑	☑	
Decoder 10	24.44	0%	0.015	0.016	0.016	0.015	Tape 6	☐	☐	☐	☐	DC 6.5
Decoder 10	24.44	1%	0.011	0.012	0.016	0.014	Tape 6	☐	☐	☐	☐	RGBW
Decoder 10	24.44	5%	0.020	0.018	0.018	0.012	Tape 6	☐	☐	☐	☐	
Decoder 10	24.44	10%	0.016	0.014	0.016	0.014	Tape 6	☐	☐	☐	☐	
Decoder 10	24.44	15%	0.015	0.016	0.017	0.020	Tape 6	☐	☐	☐	☐	
Decoder 10	24.45	25%	0.013	0.017	0.017	0.018	Tape 6	☐	☐	☐	☐	
Decoder 10	24.44	32%	7.980	11.470	11.670	12.250	Tape 6	☑	☑	☑	☑	
Decoder 10	24.45	50%	6.920	9.460	8.600	10.230	Tape 6	☑	☑	☑	☑	
Decoder 10	24.44	75%	9.480	11.620	10.980	12.360	Tape 6	☑	☑	☑	☑	

Decoder #	In V@ Decoder	Percent	C1	C2	C3	C4	Tape #?	Turns on?				Notes
Decoder 10	24.38	100%	23.900	23.960	23.940	23.990	Tape 6	☑	☑	☑	☑	
Decoder 10	24.44	0%	0.175	0.055	0.043	0.020	Tape 6	☐	☐	☐	☐	DC 9.9
Decoder 10	24.44	1%	0.202	0.068	0.054	0.017	Tape 6	☐	☐	☐	☐	RGBW
Decoder 10	24.44	5%	0.027	0.027	0.032	0.022	Tape 6	☐	☐	☐	☐	
Decoder 10	24.44	10%	0.013	0.013	0.013	0.011	Tape 6	☐	☐	☐	☐	
Decoder 10	24.44	15%	0.015	0.016	0.017	0.015	Tape 6	☐	☐	☐	☐	
Decoder 10	24.44	25%	0.015	0.015	0.014	0.012	Tape 6	☐	☐	☐	☐	
Decoder 10	24.44	47%	7.990	11.480	12.490	12.950	Tape 6	☑	☑	☑	☑	
Decoder 10	24.44	50%	6.880	10.430	9.470	10.700	Tape 6	☑	☑	☑	☑	
Decoder 10	24.44	75%	8.020	10.470	9.670	11.220	Tape 6	☑	☑	☑	☑	
Decoder 10	24.37	100%	23.670	23.770	23.730	23.800	Tape 6	☑	☑	☑	☑	
Decoder 10		N/A					Tape 7	☐	☐	☐	☐	DC 0.1
Decoder 10		N/A					Tape 7	☐	☐	☐	☐	DC 0.8
Decoder 10		N/A					Tape 7	☐	☐	☐	☐	DC 1.0
Decoder 10		N/A					Tape 7	☐	☐	☐	☐	DC 1.5 (factory)
Decoder 10		N/A					Tape 7	☐	☐	☐	☐	DC 2.5
Decoder 10		N/A					Tape 7	☐	☐	☐	☐	DC 3.5
Decoder 10		N/A					Tape 7	☐	☐	☐	☐	DC 6.5
Decoder 10		N/A					Tape 7	☐	☐	☐	☐	DC 9.9
Decoder 10		N/A					Tape 8	☐	☐	☐	☐	DC 0.1
Decoder 10		N/A					Tape 8	☐	☐	☐	☐	DC 0.8
Decoder 10		N/A					Tape 8	☐	☐	☐	☐	DC 1.0
Decoder 10		N/A					Tape 8	☐	☐	☐	☐	DC 1.5 (factory)
Decoder 10		N/A					Tape 8	☐	☐	☐	☐	DC 2.5
Decoder 10		N/A					Tape 8	☐	☐	☐	☐	DC 3.5
Decoder 10		N/A					Tape 8	☐	☐	☐	☐	DC 6.5
Decoder 10		N/A					Tape 8	☐	☐	☐	☐	DC 9.9
Decoder 10		N/A					Tape 9	☐	☐	☐	☐	DC 0.1
Decoder 10		N/A					Tape 9	☐	☐	☐	☐	DC 0.8
Decoder 10		N/A					Tape 9	☐	☐	☐	☐	DC 1.0
Decoder 10		N/A					Tape 9	☐	☐	☐	☐	DC 1.5 (factory)
Decoder 10		N/A					Tape 9	☐	☐	☐	☐	DC 2.5
Decoder 10		N/A					Tape 9	☐	☐	☐	☐	DC 3.5
Decoder 10		N/A					Tape 9	☐	☐	☐	☐	DC 6.5
Decoder 10		N/A					Tape 9	☐	☐	☐	☐	DC 9.9
Decoder 10		N/A					Tape 10	☐	☐	☐	☐	DC 0.1
Decoder 10		N/A					Tape 10	☐	☐	☐	☐	DC 0.8
Decoder 10		N/A					Tape 10	☐	☐	☐	☐	DC 1.0
Decoder 10		N/A					Tape 10	☐	☐	☐	☐	DC 1.5 (factory)
Decoder 10		N/A					Tape 10	☐	☐	☐	☐	DC 2.5
Decoder 10		N/A					Tape 10	☐	☐	☐	☐	DC 3.5
Decoder 10		N/A					Tape 10	☐	☐	☐	☐	DC 6.5
Decoder 10		N/A					Tape 10	☐	☐	☐	☐	DC 9.9
Decoder 10		N/A					Tape 11	☐	☐	☐	☐	DC 0.1
Decoder 10		N/A					Tape 11	☐	☐	☐	☐	DC 0.8
Decoder 10		N/A					Tape 11	☐	☐	☐	☐	DC 1.0
Decoder 10		N/A					Tape 11	☐	☐	☐	☐	DC 1.5 (factory)
Decoder 10		N/A					Tape 11	☐	☐	☐	☐	DC 2.5
Decoder 10		N/A					Tape 11	☐	☐	☐	☐	DC 3.5

Decoder #	In V@ Decoder	Percent	C1	C2	C3	C4	Tape #?	Turns on?				Notes
Decoder 10		N/A					Tape 11	☐	☐	☐	☐	DC 6.5
Decoder 10		N/A					Tape 11	☐	☐	☐	☐	DC 9.9
Decoder 10		N/A					Tape12	☐	☐	☐	☐	DC 0.1
Decoder 10		N/A					Tape12	☐	☐	☐	☐	DC 0.8
Decoder 10		N/A					Tape12	☐	☐	☐	☐	DC 1.0
Decoder 10		N/A					Tape12	☐	☐	☐	☐	DC 1.5 (factory)
Decoder 10		N/A					Tape12	☐	☐	☐	☐	DC 2.5
Decoder 10		N/A					Tape12	☐	☐	☐	☐	DC 3.5
Decoder 10		N/A					Tape12	☐	☐	☐	☐	DC 6.5
Decoder 10		N/A					Tape12	☐	☐	☐	☐	DC 9.9